HISTORIC LANDMARK COMMISSION
STAFF REPORT

Design Guidelines for Historic Commercial Buildings and Districts
PLNPCM2009-00628
March 2, 2011

Planning Division
Department of Community and Economic Development

Applicant: Salt Lake City Administration

Staff: Janice Lew, 535-7625
janice.lew@sclgov.com

Notification:
Notice mailed on February 17, 2011
Agenda posted on the Planning Division and Utah Public Meeting Notice websites February 17, 2011

Attachments:
A. June 16, 2010 Staff Report
B. June 16, 2010 Minutes and Consultant Notes
C. Final Draft

Request

A request by the Salt Lake City Administration to adopt *Design Guidelines for Historic Commercial Buildings and Districts in Salt Lake City.* The design guidelines build upon the existing document, *Design Guidelines for Residential Districts in Salt Lake City,* and bring focus to the City's commercial resources.

Potential Motions

Approval

I move to forward a positive recommendation to the City Council to adopt Petition PLNPCM2009-00628 as proposed by consults, Thomason & Associates.

Or

I move to forward a positive recommendation to the City Council to adopt Petition PLNPCM2009-00628 with the following changes…

Denial

I move to forward a negative recommendation to adopt Petition PLNPCM2009-00628 to the Planning Commission and City Council base on the following findings…

Table

I move to table a recommendation of Petition PLNPCM2009-00628 to the City Council and request additional information and/or research including…

Background

Project Description

Design guidelines are a preservation tool that provides a framework for making design review decisions that encourage the preservation and careful treatment of the City's historic resources, while recognizing the need for continuing adaption and improvements to these resources. Although the existing design guidelines provide a good basis for decision-making, City staff and the Historic Landmark Commission have asked that an update of the guidelines be undertaken. The issue was also raised in the 2004 response to the City Council Legislative Action that reviewed the City's approach to historic preservation. To this end, the Planning Division received funding from the Redevelopment Agency (RDA) to develop commercial design guidelines for locally-designated property and hired consultants Thomason & Associates based in Nashville, Tennessee to lead the project.

Final Draft

The final draft includes the following sections:

- **PRESERVATION IN SALT LAKE CITY**
- **BUILDING TYPES AND ARCHITECTURAL STYLES**
- **REHABILITATION STANDARDS FOR COMMERCIAL HISTORIC PROPERTIES**
- **STANDARDS FOR NEW COMMERCIAL CONSTRUCTION**
- **HISTORIC DISTRICTS**

The list of comments made by the Commission and staff submitted to the Consultant following the Commission's June 16, 2010 review as well as the meeting minutes are attached to this staff report as Attachment B. A draft was submitted by the Consultant in September of 2010. Following a review of the document, staff made the decision to address any outstanding concerns and make the final revisions in-house. The final draft can be found in Attachment C.

Note that the glossary and sign sections were taken out of the final draft of the document. The design guidelines for signs are something that the Planning Division has not had before and need additional work. And staff will do final refinements to the glossary. Both of these sections will then be presented to the Commission again for review.

Comments

Public Comments

Public comments have been received throughout the process of creating the document. The Business Advisory Board submitted written comments. Please see Attachment A.

City Department Comments

The Redevelopment Agency submitted a markup of the draft document. All issues raised by the RDA were resolved in the current draft.

Analysis and Findings

The Salt Lake City zoning ordinance outlines the jurisdiction and authority of the Historic Landmark Commission. In addition to carrying out the general purposes set forth in section 21A.06.050, the Commission shall make recommendations to the City Council on policies and ordinances the may encourage preservation of buildings and related structures of historic and architectural significance. The Zoning Ordinance does not include specific standards for the consideration of adopting design guidelines. The Zoning Ordinance, however, states that additional design standards may be adopted by the Historic Landmark Commission and City Council. The commercial design guidelines document has been developed through a collaborative effort involving a variety of groups. In addition to close interaction with staff, public participation in the planning process to date includes the following (See Attachment A for comments):

- *Historic Landmark Commission* – Several meetings were held with the Commission to receive their feedback and direction. The Commission also held Public Hearings on September 2, 2009, March 3, 2010, and June 16, 2010.
- *Public Workshops* – One public workshop to kick-off the project was held on June 3, 2009. The Planning Division held an Open House on June 25, 2009. No public input was received.
- *City Advisory Boards* – The project was presented to the Business Advisory Board twice and the Downtown Alliance.
- *Planning Commission* – As a courtesy to the Planning Commission, staff will provide these members with a copy of the document following the Historic Landmark Commission's final review.
- *City Council* – The Historic Landmark Commission will forward a recommendation to the City Council, who will formally adopt the document. A briefing was held on June 3, 2009 by the Consultant to present the first draft to City Council Members.

Findings

1. The development of design guidelines is allowed in Section 21A.06.050 of the Zoning Ordinance.

2. Historic preservation is an integral element of creating livable, vibrant and unique neighborhoods within the city. Section 21A.34.020.A of the Zoning Ordinance lists several objectives that the City seeks to achieve regarding the *H Historic Preservation Overlay District*. These objectives include:

   - Provide the means to protect and preserve areas of the city and individual structures and sites that have historic, architectural or cultural significance.
   - Encourage new development, redevelopment and the subdivision of lots in historic districts hat is compatible with the character of existing development of historic districts or individual landmarks.
   - Abate the destruction and demolition of historic structures.
   - Implement adopted plans of the City related to historic preservation.
   - Foster civic pride in the history of Salt Lake City.
   - Protect and enhance the attraction of the City's historic landmarks and districts for tourists and visitors.
   - Foster economic development consistent with historic preservation.

   Thus, the development of commercial design guidelines will contribute to the welfare and prosperity of the people of Salt Lake City.

Attachment A

June 16, 2010 Staff Report
(Excluding Draft Design Guidelines)

HISTORIC LANDMARK COMMISSION STAFF REPORT

Commercial Design Guidelines for Locally-Designated Property PLNPCM2009-00628 June 16, 2010

Planning Division
Department of Community and Economic Development

Applicant: Salt Lake City Administration

Staff: Janice Lew, 535-7625 janice.lew@sclgov.com

Notification:
Notice mailed on June 4, 2010
Agenda posted on the Planning Division and Utah Public Meeting Notice websites June 5, 2010

Attachments:
A. Draft Document
B. Public Comment
C. Minutes
D. Consultant notes

Request

A request by the Salt Lake City Administration to adopt Commercial Design Guidelines for properties with local historic designation. The design guidelines will build upon the existing document, *Design Guidelines for Residential Districts in Salt Lake City,* and bring focus to the City's commercial resources.

Potential Motions

Approval

I move to forward a positive recommendation to the City Council to adopt Petition PLNPCM2009-00628 as proposed by consults, Thomason & Associates.

Or

I move to forward a positive recommendation to the City Council to adopt Petition PLNPCM2009-00628 with the following changes…

Denial

I move to forward a negative recommendation to deny Petition PLNPCM2009-00628 to the Planning Commission and City Council base on the following findings…

Table

I move to table a recommendation of Petition PLNPCM2009-00628 to the City Council and request additional information and/or research including…

Background

Project Description

Salt Lake City is recognized nationally for its efforts to protect its historic resources and has been a leader in adopting standards that ensure their preservation. The historic preservation program is organized as a system of interrelated activities each of which play a role in protecting the City's historic, architectural or cultural resources, and that facilitate an overall strategy for economic, environmental, and community sustainability. Some of these elements are officially adopted regulations like the historic preservation ordinance. Other elements such as the design guidelines are intended to be used as means to achieve appropriate design.

Design guidelines are a preservation tool that provides a framework for making design review decisions that encourage the preservation and careful treatment of the City's historic resources, while recognizing the need for continuing adaption and improvements to these resources. Although the existing design guidelines provide a good basis for decision-making, City staff and the Historic Landmark Commission have asked that an update of the guidelines be undertaken. The issue was also raised in the 2004 response to the City Council Legislative Action that reviewed the city's approach to historic preservation. To this end, the Planning Division has received funding from the Redevelopment Agency (RDA) to develop design guidelines for commercial structures and hired consultants Thomason & Associates based in Nashville, Tennessee to lead the project.

The document includes the following sections:

- PRESERVATION IN SALT LAKE CITY
- BUILDING TYPES AND ARCHITECTURAL STYLES
- REHABILITATION STANDARDS FOR COMMERCIAL HISTORIC PROPERTIES
- STANDARDS FOR SIGNS
- STANDARDS FOR NEW COMMERCIAL CONSTRUCTION
- HISTORIC DISTRICTS

Comments

Public Comments

Public comments have been received throughout the process of creating the document. The Business Advisory Board submitted written comments. Please see Attachment B.

City Department Comments

The Redevelopment Agency submitted a markup of the draft document. Comments directly relating to the draft document include the following:

- Do the guidelines comply with existing master plans and ordinances?
- Add in RDA tax incentives for historic preservation.

Analysis and Findings

: Salt Lake City zoning ordinance outlines the jurisdiction and authority of the Historic Landmark Commission. In addition to carrying out the general purpose set forth in section 21A.08.050 the Commission shall make recommendations to the City Council on policies and ordinances the may encourage preservation of buildings and related structures of historic and architectural significance. The Zoning Ordinance does not include specific standards for the consideration of adopting design guidelines. The Zoning Ordinance, however, states that additional design standard may be adopted by the Historic Landmark Commission and City Council. The draft Commercial Design Guidelines document has been developed through a collaborative effort involving a variety of groups. In addition to close interaction with Planning Staff, public participation in the planning process to date includes the following (See Attachment D for comments):

- *Historic Landmark Commission* – Several meetings were held with the Commission to receive their feedback and direction.
- *Public Workshops* – One public workshop to kick-off the project was held on June 3, 2009. The Planning Division also held an Open House on June 25, 2009. No public input was received.
- *City Advisory Boards* – The project was presented to the Business Advisory Board twice and the Downtown Alliance.
- *Planning Commission* – As a courtesy to the Planning Commission, staff will provide these members with a copy of the document on June 23, 2010.
- *City Council* – The Historic Landmark Commission will forward a recommendation to the City Council, who will formally adopt the document. A briefing was held on June 3, 2009 by consultant Phil Thomason, to present the first draft to City Council Members.

Proposed Changes

The list of comments made by the Commission and Staff that was submitted to the Consultant following the Commission's March 3, 2010 review is attached (See Attachment C for consultant notes). Staff will continue to refine the document and address any outstanding concerns prior to transmitting it to the City Council.

Attachment A
Draft Commercial Design Guidelines

Attachment B
Public Comment

OPEN HOUSE
PUBLIC COMMENT FORM

February 19, 2009

Planning Division
Department of Community and
Economic Development

Commercial Design Guidelines

Name: Ernest E. Hunter

Address: 337 So 1100 East

S.L.C. Ut

Zip Code 84102

Phone: (801) 652-4988 E-mail Esthwoodhunter@hotmail.com

Comments: Please consider recommendations:

① Neighborhood Commercial - set backs & maintaining scale, mass, street scapes related to new construction, infill or expansions for commercial properties within historic neighborhoods.

② Parking lots
Guidelines for commercial properties within historic neighborhood that have or are required to have flat surface parking.
Potential option → screening

③ ~~Unique by neighborhood~~
Differentiate by historical District
Mentioned this was not the plan but

Please provide your contact information so we can notify you of other meetings or hearings on this issue. You may submit this sheet before the end of the Open House, or you can provide your comments via e-mail at janice.lew@slcgov.com or via mail at the following address: Janice Lew Salt Lake City Planning Division, PO Box 145480, Salt Lake City, UT 84114-5480. Please provide your comments by March 5, 2009

this is needed.

④ Reference
the original nominations by district
They have details about areas such as
2nd So & 13th that capture unique characteristics

that are important to preserve

(3) not sure where Utilities fit. would recommend this be included in your work since they are commercial (in a sense).
we have found good practices across the country that deal with Utilities within and next to historic properties.

(4) Also school building expansion Hospitals.

OPEN HOUSE
PUBLIC COMMENT FORM

February 19, 2009

Planning Division
Department of Community and
Economic Development

Commercial Design Guidelines

Name: Whitney Ward

Address: 1124 E Garfield #1
Salt Lake City UT 84105

Zip Code

Phone: 801 664 6278 E-mail wward@vcbo.com

Comments: • The information presented in the corridor was a bit unclear - better signage and project intent statements would have been helpful.
• Noise during presentation was also a bit distracting.
• The historic commercial character ppt was helpful.
The guidelines will be good as long as compatible contemporary design is permitted.
More housing is needed downtown - please provide incentives to allow this.

Please provide your contact information so we can notify you of other meetings or hearings on this issue. You may submit this sheet before the end of the Open House, or you can provide your comments via e-mail at janice.lew@slcgov.com or via mail at the following address: Janice Lew Salt Lake City Planning Division, PO Box 145480, Salt Lake City, UT 84114-5480. Please provide your comments by March 5, 2009

OPEN HOUSE
PUBLIC COMMENT FORM

February 19, 2009

Planning Division
Department of Community and
Economic Development

Commercial Design Guidelines

Name: Dennis McElroy

Address: Peery Hotel
110 West Broadway
SLC, UT Zip Code 84101

Phone: 521-4300 E-mail dmcelroy@peeryhotel.com

Comments: Interested in items related to rules governing any changes or modifications to Commercial Bldg.'s in downtown SLC, and on Historic Register.

Please provide your contact information so we can notify you of other meetings or hearings on this issue. You may submit this sheet before the end of the Open House, or you can provide your comments via e-mail at janice.lew@slcgov.com or via mail at the following address: Janice Lew Salt Lake City Planning Division, PO Box 145480, Salt Lake City, UT 84114-5480. Please provide your comments by March 5, 2009

OPEN HOUSE
PUBLIC COMMENT FORM

February 19, 2009

Planning Division
Department of Community and
Economic Development

Commercial Design Guidelines

Name: Robert A. Young

Address: 217 B St

SLC Zip Code 84103

Phone: (801) 581-3909 E-mail young@arch.utah.edu

Comments: ① Good commentary on replacement windows but some replacement windows looked slightly smaller than origin window openings and muntins/mullions.
② Also, mention of shadow lines and molding profiles, True Divided Lite, Simulated divided lite.
③ New market tax credit
④ Well Done, overall and very clear to understand.
⑤ Perhaps Mention "regulating lines" for cornice, window etc and "rhythm", "solid to void" ratio.

Please provide your contact information so we can notify you of other meetings or hearings on this issue. You may submit this sheet before the end of the Open House, or you can provide your comments via e-mail at janice.lew@slcgov.com or via mail at the following address: Janice Lew Salt Lake City Planning Division, PO Box 145480, Salt Lake City, UT 84114-5480. Please provide your comments by March 5, 2009

OPEN HOUSE
PUBLIC COMMENT FORM

February 19, 2009

Planning Division
Department of Community and
Economic Development

Commercial Design Guidelines

Name: Brooks McIntyre

Address: 154 West 600 South
Salt Lake City, UT 84101

Zip Code

Phone: E-mail brooks@utahhospitality.com

Comments:

Please provide your contact information so we can notify you of other meetings or hearings on this issue. You may submit this sheet before the end of the Open House, or you can provide your comments via e-mail at janice.lew@slcgov.com or via mail at the following address: Janice Lew Salt Lake City Planning Division, PO Box 145480, Salt Lake City, UT 84114-5480. Please provide your comments by March 5, 2009

SLC Business Advisory Board 8-12-09

RE: Commercial Guidelines for Historic Buildings
To: Janice Lew

In review of and with discussion about your presentation to the board at last month's BAB meeting, I would like to formally respond.

In the interest of building business in SLC, any extended red tape a business must go through to hang out a shingle and open for business, is frowned upon by all these business owners. However, as to the Historic Preservation of the Commercial buildings in SLC, we feel that an extra overlay of restriction is a necessary step in protecting SLC's commercial history. It is recognized that this has not been done in our history prior to this new zoning overlay. We feel that the owners of such locations will be the ones that must adhere to the new restrictions and court their lessee's appropriately.

If the building is in fit condition to house a suitable business for the location, we understand it as a viable layer for planning and zoning to review the construction and any structural changes to the integrity of a building that is registered as Historic.

It would be helpful for all of the Historic Property Building owners affected by these changes to be made aware of exactly what alterations can and cannot be made to their building (s) as these new guidelines are put into effect and to subsequent new owners prior to a new purchase of a Historic Property.

One of our greatest concerns is the chance that the building owner will not be able to keep the building in business because of these restrictions, it would go vacant and become an even greater problem for the city, the neighborhood and the owner.

We would like to note that the actual locations have not been discussed.

Thank our for your presentation,
Sue Stahle - Chair
and the BAB

Attachment C
Minutes

Minutes from HLC discussions of Commercial Design Guidelines

June 3, 2009

DINNER 4:35:27 PM

Janice Lew noted the first item of business is to discuss the preliminary draft of the commercial design guidelines. She introduced Phil Thomason, a consultant hired to work on this project. Ms. Lew reviewed that the Historic Landmark Commission will eventually make a recommendation to the City Council, which has authority to approve and adopt the design guidelines. She noted that the issue will be included regularly in the monthly Planning Division Open House to elicit public comments and that a draft will also be presented to the Planning Commission for their review. Ms. Lew stated that Councilmembers Love, Christensen, and Garrott met earlier today to discuss this preliminary draft. She requested the Commissioners' input during this preliminary review and turned the time over to Mr. Thomason.

Mr. Thomason emphasized that the guidelines are a work in progress, noting that some comments have already been incorporated and others have been identified for inclusion of additional information, drawings, and photos. He recognized that the guidelines are prepared in accordance with the format and appearance of the adopted residential design guidelines: overview of architecture with specifics about styles and building forms. Mr. Thomason affirmed that a review of all commercial buildings in the overlay districts has been completed, including the neighborhood shopping areas and corner commercial buildings in areas such University, Capitol Hill, Central City, and the Avenues. He stated that the purpose of the guidelines is to provide information to property owners with commercial buildings Downtown outside of Exchange Place.

Mr. Thomason reviewed the range of historic Downtown buildings: the 1894 Italianate/ Victorian Romanesque Colin building, the 1887 Victorian Romanesque Kerrick Building, Richardsonian Romanesque building 1890, neoclassical 1899 Stock & Exchange building, high rises with Sullivanesque influence such as the 1909 McIntyre and 1911 Kearns buildings, and the 1910 Boston and Newhouse buildings. He referenced the one-part/two-part buildings make up the residential areas of commercial infill that provided neighborhood services, identifying examples from Capitol Hill of a one-part commercial building, a single story building with the storefront with a modest upper façade and a nearby restaurant building with a one-story framed wing on the north side. He shared another example from the Central City neighborhood which maintains much of the original storefront entrance. Mr. Thomason noted historic commercial buildings clustered together to provide neighborhood services and others on corners. He identified the two-part commercial structures with a storefront below and one or two stories above. He noted building material changes in buildings from the 1930s including copper and glass display windows and steel casement windows on the upper floors.

Mr. Thomason noted a larger variety of house-stores than typical in other communities. He explained these are buildings joined together, citing an example of a store building with an adjacent building used by the proprietor of the store. He noted that often the dwelling unit will be smaller in scale with additional setback from the street, also noting a remodeled structure from the 1950s with new siding materials. Mr. Thomason identified the issue of changing building materials, specifically whether or not the materials themselves are significant and should be preserved or if the building should be taken back to its original design. He recognized that such materials from the 1950s and 1960s are raising preservation questions across the nation.

Mr. Thomason referred to the buildings along South Temple from the late 1950s and 1960s that are considered contributing structures, noting architectural differences such as flat roofs and a mixture of materials, not all of which have a long life expectancy (e.g., Formica on bulkheads) and which cannot be obtained anymore. He explained that the different materials and designs are addressed in the design guidelines. He challenged the Commission to question, when considering buildings from the 1950s and 1960s, what is significant, what buildings are contributing in and of themselves, and what buildings that are not in an overlay district should receive attention for consideration of landmark status in the future.

Mr. Thomason stated that their review of design guideline elements incorporated additions, rear facades, rooftop additions, preserving and maintaining original architectural features, awnings, brickwork, nonabrasive cleaning, cornices, doors, lighting, signage, windows, retrofitting to meet American Disability Act requirements, and new construction or infill. He noted the importance of keeping original design elements and utilizing historic photographs and records to determine appropriate designs.

In addressing infill, Mr. Thomason acknowledged that most of the commercial infill occurs in the Downtown area, as other districts are primarily residential. He explained the importance of looking at the context of the neighboring structures when considering infill, acknowledging the need for communities to define a preference for infill that mimics historic design, aka replica or replica light or more contemporary but compatible designs which incorporate historic elements such as arches, windows, and building materials. He noted a Seven-Eleven store in the Avenues which picks up historic details of the neighborhood without trying to be an exact copy of a historic building, and shared examples of other more contemporary designs from Louisville and Kansas City which incorporate design elements to enhance compatibility. Mr. Thomason emphasized the need for the Commission to assess their preference for new construction in historic districts. He reviewed that design guidelines need to incorporate how to effectively handle building materials of the 1950s and 1960s, noting that revising design guidelines every 10-15 years seems to be a good approach to addressing such questions as they continue to arise. He concluded by soliciting questions and input from the Commissioners.

Commissioner Oliver identified a concern with the section dealing with roofline additions which states that "the edition be recessed sufficiently from the primary façade so it is not visible from the street." She noted that with the width of streets in Salt Lake City, it is possible to see anything depending on where one is standing, suggesting a rephrasing that makes it possible to meet that guideline. Mr. Thomason confirmed that providing guidelines in areas which are primarily residential is particularly

challenging, as such commercial buildings often can be seen from two sides. He conceded that roofline additions are not feasible for most commercial buildings in residential areas and agreed to consider language that would soften roofline additions in residential areas. Chairperson Fitzsimmons suggested language which preserves scale and mass of the façade rather than addressing visibility. Commissioner Oliver expressed appreciation for language which encourages such additions to be smaller and simpler in design and suggested that be repeated throughout the guidelines.

Chairperson Fitzsimmons inquired how Mr. Thomason suggests addressing issues of the scale of an addition compared to the scale of the existing structure. Mr. Thomason responded that commercial additions are usually seen as 1/3 of the size of the overall footprint of the historic building, with design based on established standards that express a preference for contemporary designs with historic elements that identify it as a modern addition or for recreating historic buildings. He noted that some communities establish set percentages for addition size while others review each case individually, factoring in location (midblock versus corner).

Commissioner Oliver queried whether residential or commercial guidelines should apply to homes in commercially zoned areas. Mr. Thomason clarified that if the historic use is a residence, it should be reviewed under residential guidelines. However, if a conversion has occurred, such as adding a storefront, then commercial storefront standards can be used. He stated that typically residential guidelines are applied to any residential building that is redone into offices or commercial use. Commissioner Oliver noted a number of houses which have been converted to commercial uses and suggested that the code clarify which guidelines will apply to such structures.

Chairperson Fitzsimmons noted references to post-war redecoration of old façades which are becoming historic and questioned the best way to assess or require assessment of the condition of what is underneath. Mr. Thomason noted examples of such assessment in the Downtown area. Chairperson Fitzsimmons recognized that larger commercial owners may be able to do that type of work but questioned the ability smaller owners to make that commitment. Ms. Lew noted an example on South Temple with a front façade from the 1950s which the property owner got listed on the National Register. Chairperson Fitzsimmons noted that this issue, along with infill, requires determination of whether replicating the original historic structures is better than more honest modern expressions that clearly differential newer structures. Mr. Thomason confirmed that communities are trending toward appropriate contemporary design that either blends well as infill or additions that speak of the present. He noted that architects are coming of age with the historic preservation movement and have exhibited greater sensitivity over the last 10-15 years regarding designing buildings that respect the historic context in which they are being placed.

Commissioner Davis inquired whether the city provides a resource that identifies contractors who specialize in historic preservation. Mr. Thomason replied that some nonprofit organizations maintain lists of contractors with experience in historic preservation who are referred to them by property owners. He explained that some cities are moving toward certification programs that require a certain level of yearly training provided by the state preservation offices or historic architects. Ms. Lew

confirmed that no such lists are maintained for Salt Lake City; Commissioner Oliver indicated she would share the suggestion with the State Historic Preservation offices.

Commissioner Oliver queried whether variances for required parking for historic commercial buildings are provided for in city code. Mr. Paterson noted that many structures are legal non-complying in that they were created prior to the imposition of current parking standards and thus can legally maintain the current use with the current parking. He noted that a change of use might require additional parking, explaining that zones such as mixed-use zones have a process to allow exemptions of required parking for a certain number of square footage, pedestrian improvements, etc. Commissioner Davis inquired whether the recent ordinance passed by the City Council waives parking requirements for neighborhood businesses. Mr. Paterson explained the adopted ordinance allows for the exemption of up to 3,500 square feet of floor area based on certain improvements which benefit pedestrians, noting that for many small businesses the exemption would eliminate the need for all parking. Commissioner Davis asked if the exemption is an administrative decision or requires formal hearings. Mr. Paterson confirmed that if the standards are met, the exemption can be approved administratively.

Commissioner Oliver requested that the paragraph on solar panels under design standards for mechanical equipment be expanded. Mr. Thomason confirmed that additions to this part of the guidelines are planned. Chairperson Fitzsimmons asked whether multiple systems would be included. In response to Mr. Thomason's explanation that exterior systems, e.g., solar shingles, are covered, Chairperson Fitzsimmons suggested that images be added to the guidelines.

Chairperson Fitzsimmons solicited general comments from the Commissioners. No additional comments were made. Ms. Lew asked if the Commission would like further discussion regarding the contents of the design guidelines in a work session, clarifying that the finalized guidelines would be formally presented to the Commission for their recommendation to the City Council. It was agreed additional comments would be emailed to Ms. Lew and that the guidelines would be scheduled at a future briefing.

August 5, 2009

ISSUES ONLY 7:11:44 PM

PLNPCM2009-00628 - Commercial Design Guidelines —The Salt Lake Planning Division has hired consultants Thomason & Associates to create a new chapter for the design guidelines used by the Historic Landmark Commission to make design review decisions for properties with local historic designation. Currently the design guidelines are for residential properties only. This supplemental information will provide guidance for commercial properties. The draft design guidelines are available on the City's website at www.slcgov.com/boards/hlc/hlc-agen.htm *View staff report*

Staff Presentation 7:15:21 PM

Janice Lew presented the plans for revising the Commercial Design Guidelines; preservation, architectural style, rehabilitation standards, standards for new construction, general design guidelines, and then a section that discusses the various districts. Ms. Lew addressed the Commission asking for guidance and direction on revising the guidelines, with a strong emphasis on signage and photos.

Questions by the Commission 7:30:14 PM

Chairperson Fitzsimmons voiced his concern of the global outlook of the preservation guidelines in regards to commercial historic buildings. Commissioner Lloyd suggested using language describing problem areas and usage for commercial buildings. Ms. Lew suggested breaking up the section into smaller sections for presentation and Commissioner Polly agreed with Ms. Lew. Commission would communicate with staff through email for suggestions and questions on revisions. Commissioner Oliver suggested having these discussions during the dinner hour prior to the meetings and all have agreed to discuss the specifics of revising the guidelines at the dinner meetings prior to the open Commission meetings.

Public Comment 7:51:01 PM

Chairperson Fitzsimmons invited Cindy Cromer to address the Commission. Ms. Cromer suggested that the language "sustainability" be added into the revised guidelines.

September 2, 2009

PLNPCM2009-00628; Commercial Design Guidelines—This Commission will discuss the proposed commercial design guidelines for historic designated properties.

Chair Lloyd recognized Janice Lew as staff representative.

Ms. Lew stated the Commission would be specifically discussing the rehabilitation standards of the Design Guidelines. These guidelines were written perspectives that provide clarity and the application of the standard of the zoning ordinance. She stated standards were based upon the Secretary of Interior Standards for rehabilitation and provided criteria against which work may be measured, and the guidelines are guides for the applicants work, providing instructions on how to meet the standards.

Ms. Lew stated ultimately the goal is to encourage the preservation and careful treatment of historic recourses, while recognizing the need for continuing adaptation and improvements to those resources. She stated the guidelines are divided into several sections with respect to rehabilitation: site features, store fronts, primary materials, windows, architectural details, roofs, foundations, and additions.

She stated these design guidelines talk about maintaining and preserving character defining features, then if something is so deteriorated an owner would start looking at the replacement of materials. She stated staff was looking for the Commissions input on how well this rehabilitation

section reflects the Commission's philosophy and if it sufficiently defines the character features of a commercial building, provides information about the basic principles of historic preservation and urban design, whether or not in provides clarity in the application of the zoning ordinance standards, and whether or not these guidelines provide a comprehensible information and guidance on the appropriate treatment and resources. She stated these guidelines should also provide a good framework for staff and the Commission to make their decisions.

Chair Lloyd stated there were several sections to go through and inquired if staff should proceed sequentially.

7:06:25 PM **Public Hearing**

Chair Lloyd opened the public hearing portion of this petition.

Mike Stransky stated he did not have a great understanding of these guidelines at this point and he was largely present at this meeting to understand what the City was trying to accomplish here. He was in support of these guidelines because they were necessary, but he had a few comments for the Commission to consider. First, regarding economic hardship, it seemed there were resources for residential owners to turn to, but when dealing with a commercial piece of property he was not sure the same criteria applied. He stated sometimes an owner was in a better monetary position shutting their operation down rather than abiding by the rules of historic preservation. He stated standards and guidelines should not back someone into a corner so strictly that there was not a way to help retirees in a historic neighborhood to the other side of the spectrum of someone trying to save commercial enterprises. He stated economic hardship had to be part of the discussion whether or not the Commission could make a ruling on it or not, it was an important piece, and he would also like more clarity on the procedures of the process.

Chair Lloyd stated even the City codes allowed for some interpretation from a code official, in terms of the feasibility of preservation issues, which would allow for some of the flexibility Mr. Stransky was looking for.

Commissioner Lloyd closed the public hearing.

7:15:48 PM **Comments by the Commission**

Commissioner Oliver suggested that sustainability and historic preservation be stated in the opening material of the commercial design guidelines, just a small section on sustainability and historic preservation and what that meant, because the entire document was essentially about sustainability and that should be stated upfront. She also suggested a list of other resources to help guide people through this process, such as the Utah State Preservation Office and the list of contractors, architects, preservation specialists, etc. with different backgrounds in historic materials for the public to have a resource of some technical assistance.

Commissioner Lloyd stated residential structures converted into commercial uses were still evaluated by the residential design guidelines. He inquired if there was a point when a property

was well established as a commercial use, if that evaluation would fall under the commercial design guidelines because there may be site features relative to commercial use.

Ms. Lew stated that was a point raised previously. She inquired if there needed to be a distinction made to address those residential buildings that were being converted to commercial uses.

Commissioner Lloyd stated if a building's zoning allows for commercial uses, then those guidelines should be evaluated.

Commissioner Oliver inquired if a commercial enterprise was located in a residential structure; than should those residential guidelines need to be followed.

Ms. Zeigler suggested it may be as simply as referencing the residential for the building itself, which still read like a residential building no matter what the use was, then the commercial guidelines were reference regarding site features like parking, access, mechanicals, etc.

Commissioner Oliver stated that was a great start, if staff could think that through to make sure that would work explicitly for the person trying to use the guidelines.

Commissioner Lloyd inquired if an owner wanted to re-lamp with LED lights or compact florescent lights would these guidelines on Page 11 address that, and do these guidelines address lighting efficiency.

Ms. Zeigler stated the intent was the fixture itself, not the bulbs or how it worked.

Commissioner Oliver stated on Page 15, there was detail regarding original framing and she inquired if this was helpful and was as detailed in the residential portion of the document.

Ms. Lew stated some of that detail was included in the residential portion of the document. She stated ultimately these two documents would be blended.

Chair Lloyd inquired of staff what the next step would be.

Ms. Lew stated the Commissioner's comments would be sent to the consultant and then the Commission would be looking at the next small portion of the document at the following meeting.

Commissioner Oliver noted on Page 23 it stated, the use of hard based mortars was entirely appropriate with some hard bricks, beginning around the 1930s. She stated that to tell everyone they needed to use a lime-based mortar seemed inappropriate.

Ms. Lew stated windows were the next section to discuss. There was already lengthy discussion regarding preserving original windows that made economic and environmental sense. She inquired if the language staff included was something the Commission could support.

Commissioner Oliver stated some great standards had been included regarding when someone could replace a window, but there were not clear guidelines on when historic doors could be replaced.

Commissioner Harding stated she felt doors were sturdy enough that they were always repairable, but windows were pretty fragile and constantly exposed to the weather.

Commissioner Bevins stated he agreed there were usually fewer salvaged doors in historic houses versus windows.

Ms. Zeigler stated safety issues were the topic of discussion regarding residential structures, which was why there was not much mentioned about doors, and usually the original door was not part of the structure in the first place.

Commissioner Oliver stated she would like to see some consistency regarding doors and windows.

Commissioner Oliver stated the one thing missing from the windows section was discussion on muntins, true divided light versus snap-in or sandwiched-in muntins. She suggested adding language to Page 33. She stated if replacement was necessary, it needed to replicate what was originally there.

Ms. Zeigler inquired about simulated divided lights that were mounted on the inside and outside.

Commissioner Harding stated that would be okay, they looked very similar.

Commissioner Harding stated the Commission kept approving metal clad wood windows. She noted they looked nice, but she was unsure as to why approval was given because it would not weather like a wood window.

Ms. Zeigler stated the new growth wood did not last as long as the old growth wood, so it was a type of concession to people who did have to replace windows.

Commissioner Harding inquired why then just a metal window was not allowed.

Ms. Zeigler stated because it was wood on the inside, she stated it would be helpful to add additional language regarding residential structures.

Ms. Lew brought the Commissions attention to the issue of vinyl on page 30.

Commissioner Bevins stated the first sentence stating, *most windows do not look like historic wood windows*, began by dismissing this idea because there had been changes and the Commission was presented with some pretty nice vinyl windows in the past, and he was not sure this was a balanced statement anymore.

Ms. Lew stated there needed to be a balancing of the sustainability issues as well.

Ms. Zeigler stated vinyl was an extremely toxic material; it created toxic fumes within a home and if it burned those fumes were extremely toxic. She stated when looking at materials it was also important to look at how long it would last.

Commissioner Bevins inquired if the final draft of this document would include a detailed index to the guidelines along with a table of contents.

Ms. Lew confirmed there would be.

Commissioner Fitzsimmons stated by looking at these guidelines rather globally the idea was to preserve buildings, but to be alive and thriving as well, otherwise owners might abandon them and request demolition. He stated the Commission needed to focus on these tools, and how these guidelines would be a benefit in the future. He stated that was his concern regarding the commercial guidelines, what could be done other than demolition.

Ms. Lew inquired if Commissioner Bevins felt there was not a lot of flexibility within the guidelines.

Commissioner Fitzsimmons stated he did not see mechanisms in place for flexibility.

Chair Lloyd stated if a smaller historic structure in a local district fell under these guidelines, the fact that these guidelines were residential meant inherently there was a little bit of flexibility. He stated it might be helpful to give the standards to an applicant to review at the beginning of the application process.

Commissioner Oliver stated the federal tax credit had provided an increase of projects in historic districts and could help applicants manage the costs of preservation.

Commissioner Fitzsimmons stated that helped when dealing with the cost of preservation, but if the issue was larger design issues it still may not be the answer. He noted the ZCMI façade was a great example of this issue.

Commissioner Oliver stated maybe the answer was the Commissioner's approach. She stated when they dealt with the ZCMI façade she felt much more willing to compromise, which was the Commissions role it seemed, and this might be different when dealing with residential structures.

Ms. Zeigler stated maybe that was not the best example because it was just a façade and not a building. She stated she wanted to discuss the ordinance and the Secretary of Interior Guidelines. She stated the entire purpose for this process was to help guide change, not to prevent change, because buildings have to change. She stated the ordinance, for the most part, follows the national Secretary of Interior Standards and the design guidelines were ways to implement that ordinance. She stated there was flexibility to look at each project individually, which had been done in the past and which was the whole point of the guidelines being so broad and would aid in fair decisions.

Chair Lloyd inquired if the Public Safety Building came before the Commission in the future would the guidelines be helpful in reviewing that project.

Commissioner Fitzsimmons noted if someone wanted to preserve ninety percent of that building, but wanted to make sweeping changes for a retail enterprise on the ground floor, the Commission would get into the discussion of existing doors and windows, but could the Commission accommodate themselves to that kind of a change to make the building salvageable, which the Commission made a motion on tonight stating that was what they wanted to happen.

Commissioner Funk suggested maybe a statement could be created to include in the guidelines federal tax credit requirements. She also stated that it might be possible to list the economic

incentives that were available at the beginning of the process and let the applicant know the resources available.

Ms. Comarell stated staff shared the concern with the Commission that preservation not only be seen as a regulatory body, but a service. She stated the City was trying to get information out to the public and these guidelines would be a marvelous tool in the future.

October 7, 2009

PLNPCM2009-00628 Commercial Design Guidelines – The Historic Landmark Commission will discuss the proposed Commercial Design Guidelines for historic designated properties. This discussion will be held in Room 126 following the regularly scheduled meeting and is open to the public for observation.

Chair Lloyd recognized Janice Lew as staff representative.

Ms. Lew presented the second part of a three part series regarding the Commercial Design Guidelines, with the purpose to receive instruction and guidance from the Commission to give to the consultants working on the project. She stated the topic of discussion would be the design of additions, new construction, and some elements of the general design standards including: accessibility, seismic, and mechanical service type properties.

She stated dealing with the additions there were several different types that would be considered including the ground level, roof additions, and additions that were house form buildings. She stated when looking at ground level additions those involved expanding the footprint of a structure either to the rear or side of a building and tend to have the least amount of impact on the character of a building. She inquired of the Commission if they felt the ground level additions should maintain the original alignment of moldings, cornices, and upper story windows, that exist on the main part of the building.

Ms. Lew noted buildings that were built for a residential purpose and were now being used for commercial purposes were typically attached to the rear and secondary side elevations and warranted careful consideration by trying to make sure additions were sensitive to the historic building, as well as to neighboring buildings and spaces.

Ms. Lew stated she wanted to cover new construction and a section that would cover new design considerations was added to the document. She stated this was a similar format to the residential structures which basically outlined the typical approach and design features, and included discussions about site sign, building scale, building form, and building details. She inquired of the Commission what might help them when dealing with these types of buildings. She stated when looking at the house-type additions the Commission should really consider accessibility as well.

Commissioner Lloyd stated new construction in the city was outdated and he wondered how much design input a historic district had, and was that a positive element in the design of some of those existing buildings in the city. He stated the Commission liked to see building additions that were a

product of their time period, but the buildings along 400 South looked like the product of the historic district, meaning a semi-modern building covered with some traditional details.

Commissioner Fitzsimmons stated the Commission should be careful not to destroy creativity by being prescriptive.

Commissioner Oliver stated one way to put it would be historic buildings would continue to evolve and as long as the size and scale were respected and not overwhelming to buildings adjacent to them.

Ms. Lew inquired if the language in the Design Guidelines was helping to allow that type of development.

Commissioner Oliver stated she felt it was, and it did allow very different interpretations. She stated size, scale, and defining lines, and cornices on the building were all important to keep in mind. She stated noise from commercial systems, noise from HVAC, as well as design issues should be taken it consideration.

Ms. Lew inquired where Commissioner Oliver thought those suggestions would fit into the guidelines.

Commissioner Oliver stated through some minor language changes that suggestion could be worked in throughout the entire document.

Ms. Lew inquired if the Commission felt there was sufficient language in the document to address buildings being from their own time period.

Commissioner Funk stated on Page 45, under *Lateral Additions*, it stated, *lateral additions are less preferable than rear additions.* She noted she would prefer *less desirable* instead of *less preferable.* She stated the illustrations included in the document were too dark and it was difficult to see what was trying to be depicted, but the drawings were adequate.

Ms. Lew stated because this was such a large document she scanned the sections for this meeting, but each Commissioner should have received a color copy of the full document a few months ago to use as a reference.

Commissioner Oliver noted the building reference on 68 K Street was a commercial building that was converted to a residence, so it was not a commercial building at all, but was used frequently in the document. She referred the Commission to Page 50.

Ms. Lew stated on Page 46 it discussed the conversion of residential properties to commercial uses and then the photograph portrayed the opposite.

Chair Lloyd stated that was a more common pattern, industrial lofts were converted to residential uses, it might be easier to make the argument that it was still a commercial structure, even though it was being used as multifamily residences.

Commissioner Oliver inquired if a specific directive needed to be made regarding that, because the Commission had decided residences converted to commercial uses would abide by the residential design guidelines. She inquired if the guidelines needed to say commercial properties converted to residential uses should abide by commercial design guidelines.

Ms. Lew stated if that was the direction the Commission would like to take that was fine, or different types of guidelines for each of those buildings would also work.

Chair Lloyd stated it seemed more consistent that if a commercial storefront was converted to residential use, then the structure really did need to be consistent with the commercial design guidelines.

Ms. Lew stated the language the Commission discussed at the last meeting was the guidelines stated, *the applicant follows the residential guidelines for the residential building and references the commercial guidelines for site features, parking, access, mechanical, etc.* She inquired if the Commissioners still agreed with that.

Commissioner Hart inquired if the Commission wanted to consider when the conversion took place, because if it was converted more than fifty (50) years ago then would the Commission need to respect that change being historic in its own right, and residential may apply in some cases more than commercial.

Commissioner Lloyd inquired if there were any examples Commissioner Hart could think of where that was the case.

Commissioner Hart stated no, but at some point that might become an important factor, once a change was fifty (50) years old the Commission might want to acknowledge it, and not simply say commercial buildings converted to residential uses needed to be looked at as commercial, because if it was residential for one hundred years the commercial aspect of it may have taken a backseat.

Chair Lloyd stated something that was built fifty (50) years ago could be recognized as a historic use, which might determine the standards that apply.

Commissioner Hart stated every building had to be looked at individually to figure out the dominating features, while still respecting what came before.

Ms. Lew stated she would pass on to the consultant that the Commission did recognize additions that had acquired significance in their own right, and there should be some language included that addressed commercial properties being converted to residential as well.

Commissioner Oliver stated the Commission should not be trapped by the fifty (50) year rule either. She stated there were a lot of properties converted in the city to commercial uses and if they were built shoddily and someone wanted to restore the house, that was older than the addition, the Commission did not want to be powerless when it came down to it.

Commissioner Hart stated if it was an A or a B building it was considered to be kept.

Commissioner Oliver stated frankly a building which had that done to it was noncontributing, and these things were going to start to come up more and more frequently.

Commissioner Hart stated if that storefront was an old contributing store front, for instance a 100 year old house in back and a 50 year old store front in front, if the store front was still contributing it was old enough and had enough integrity to keep both pieces.

Chair Lloyd stated the question was would there be an instance where that scenario would occur.

Commissioner Hart stated maybe the general language that should be included would be in regards to recognizing and respecting contributing aspects of whatever exists, if a storefront still had historic integrity it was still considered a contributing part of that property whether the full Commission agreed on it or not, it reflected the history of what was happening. She stated to clarify she meant the windows were still original and had not been enlarged or enclosed, doors changed out, etc.

Commissioner Fitzsimmons stated the fifty year characteristic was kind of an arbitrary measure, but it gave some notion it had become part of the fabric of a historic neighborhood. It was not just the architecture, but the history that went along with it that was fascinating, which was what the Commission was after.

Commissioner Oliver stated the fifty year timeframe used to bridge a significant changing point in history, which was World War II, prior to that there was a certain type of construction, so in the 1960s when the preservation movement started fifty (50) years extended past that war.

Commissioner Fitzsimmons stated it was trying to save all of the Victorian houses.

Commissioner Oliver stated that was exactly what it was designed for, and she was saying that timeframe needed to be rethought a little bit, now that there was not that giant cutoff point in history.

Chair Lloyd stated one of the most exciting things that was happening in preservation currently was around mid-century/modern preservation. He stated the architectural gems built in the 1950s were something that people now connected to, which was not to say they did not appreciate Victorian houses, but there was something about the preservation of early modern/post war housing. He stated there was so much bad building that came with that, so it might be hard to distinguish.

Commissioner Oliver stated there were wonderful things that happened in that time period, but now there was a lot of it.

Commissioner Fitzsimmons stated part of the history was that explosive growth and the need for stuff that was on hold for twenty years because of the depression and the war, it was part of the character.

Chair Lloyd stated the types of multifamily housing built in the avenues in the late 1950s early 1960s, was the predominate construction that went on there, which was the multi-family units that destroyed single-family housing.

Commissioner Oliver agreed, the building of those box square apartments was what drove the whole creation of the avenues historic district, and were now fifty years old and the city was now trying to save what actually forced the creation of that historic district. She stated it was wonderful history, but a complicated issue she felt had not been addressed.

Chair Lloyd inquired what the city ordinance said about the standards. Was fifty years used as criteria to save a structure.

Ms. Lew noted that did exist.

Commissioner Hart stated the goal of the historic districts was to preserve history, not just to preserve the point in time the Commission felt was the prettiest.

Commissioner Oliver stated she knew the goals of preservation, but it was just ironic and something the city really has not grappled with.

Chair Lloyd stated this would be a good time to bring up Trolley Square. Were there guidelines that were looked at while reviewing that case?

Ms. Lew stated there really was not much, as far as guidelines, to support anything. There were a few sections in the central city area, but otherwise there was not much guidance when looking at the criteria for new construction for example. She stated in the case of Trolley Square, the current guidelines were used, the question was did this document now add to that project review, and was there more direction when looking at the standards found in the zoning ordinance.

Chair Lloyd stated Trolley Square was a unique project, because it involved an entire block of the city, so all of the additions were front additions. He stated he would like to think the Commission basically got it right when Trolley Square was reviewed and what was approved was a better designed project than what was originally presented.

Ms. Lew stated the Commission did have to work really hard on the review of that project, and the Commission should keep in mind the Commercial Design Guidelines were also for architects and designers to review to be able get the same design by using these guidelines for direction.

Commissioner Fitzsimmons stated they probably would have come with the same project they presented to the Commission at first; they took a great deal of care regarding the larger components of that project.

Chair Lloyd stated there were a few design elements that were totally modern, but the majority was good.

Commissioner Oliver stated the most troublesome element was the giant Wholefoods store, so maybe additional guidelines in the section on storefronts would be helpful in the future.

Commissioner Fitzsimmons stated regarding the Trolley Square project, sometimes the Commission forced the buildings to look pretty average in the interest of making them look sort of like what the predecessor was. He stated the Commission kept beating at the design plans for the Wholefoods store to make it a less contemporary structure, which actually would have been perfectly appropriate there for it's own time. He stated that was the problem with really restrictive language, it really was hammered down to something that was indistinguishable from everything else on the block, which was not particularly good; however, he stated the preservation pieces of the guidelines were really good.

Chair Lloyd suggested adding to the guidelines that if someone could explain to the Commission why an alternative material would be better than the preferred material the Commission would be open to that discussion.

Ms. Lew inquired if the Commission wanted that suggestion to apply to additions as well as new construction.

The Commission stated yes.

Chair Lloyd stated the Commission saw new materials all the time, that might not need to be excluded, but a discussion would need to take place regarding how it would related.

Commissioner Oliver stated that mass and scale was really the element that could destroy the feel of a project. She stated it was the most popular public comment when the neighborhood viewed something negatively.

Commissioner Funk stated the same information regarding materials needed to be written throughout the document, as well as the mass and scale whether it was in regards to additions, rooftops, accessibility, ground additions, etc. She stated on Page 53 it read, *access ramps should be simple in design. Simple designs will be more compatible with historic buildings.* She inquired if the Commission agreed with that.

Ms. Lew stated when dealing with accessibility for a commercial structure, there was a possibility that a structure would be put in on the front of the building.

Commissioner Funk stated there seemed to be a conflict between that sentence and the policy statement on Page 51, so that needed to be corrected as far as materials were concerned.

Commissioner Fitzsimons stated the popular assumption was t accessibility was a stick-on solution to the building and there may be circumstances when the redesign of the façade to give grade level access was more appropriate, so should the Commission prohibit this by saying accessibility access could only be by ramping, or should other approaches be considered and allowed. He stated it might be appropriate for that sentence to state, *design and materials should be appropriate to the historic structure.*

Commissioner Hart recused herself from the meeting at 7:42 p.m.

Chair Lloyd stated accessibility was a building code requirement, which the Commission recognized, there were certainly conditions where ramps needed to be provided that might have a temporary looking appearance, so while it was nicer to have concrete integrated ramp structures that look like they belonged, there probably did need to be a place in the guidelines for wood construction as well, with some regulations.

Ms. Lew inquired if the Commission would also like to allow for substitute materials for ramps and accessibility.

Commissioner Fitzsimmons stated these types of things were in response to an immediate need and sometimes were not a permanent fixture, which was a key element for a historic house.

Mr. Paterson stated he did not remember seeing certificates of appropriateness being issued regarding this, it had probably happened. It was part of the law to provide accessibility and in certain instances it was a matter of finding a cost effective way to do that without destroying the character of the building. He stated there were a lot of requests by people building porches, stairways, or decks and wanting to use alternative materials like Trek and sometimes there was not a lot of guidance in the guidelines. He stated there were a lot of alternate materials coming out and maybe the Commission needed to do a better job at having these types of discussions to help formulate those guidelines.

Chair Lloyd stated Trek was a brand name for a plastic/wood composite material, which had recyclable and durable materials. He stated Trex was not a structural material, it was usually used for decks and so far seemed like it was a good solution.

Commissioner Fitzsimmons inquired if the Commission approved a substitute material, would it forever be an acceptable material.

Mr. Paterson stated the Commission's policy document was revised over time to deal with new types of materials, or the use of materials in a different way that was seen in the past. He stated to adopt a new policy it did not require a whole ordinance text amendment type of process.

Chair Lloyd inquired if the Commission allowed a synthetic material like Trex to be used, would that be closer to having to legitimizing vinyl fencing.

Commissioner Fitzsimmons stated the word compatible was pretty open; it would seem that would have to be well defined.

Ms. Lew stated substitute materials were allowed for porches in most cases because you could not really see it, but she was not really aware of how that allowance had evolved.

Commissioner Oliver inquired if Ms. Lew felt it would be better to remove some materials from the list to give the guidelines and the Commissioners more flexibility in the future. She stated the Commission was always going to struggle with material issues, which was part of the job, but if some of the materials were removed the Commission could review each petition and decide what was specifically appropriate.

Commissioner Fitzsimmons agreed.

Commissioner Funk stated Ms. Lew could use the language appropriate and sustainable materials.

Commissioner Fitzsimmons stated that would open another realm of discussion, which would probably be beneficial as well.

Commissioner Oliver suggested the word *compatible* because it gave the Commission a lot of leeway.

Ms. Lew inquired how the Commission felt about seismic design. She stated staff asked for more specifics especially when dealing with commercial type buildings and what it would take to seismically upgrade those.

Commissioner Fitzsimmons inquired why the Commission would want to make seismic design reversible; he stated he could not imagine circumstances when the building code would allow those changes to be reversed.

Commissioner Oliver inquired if the word *reversible* could be deleted or replaced with, *to allow repair of the historic materials.*

The Commission agreed with that.

November 4, 2009

STAFF PRESENTATION

Janice Lew presented the last portion of the Commercial Design Guidelines to the Commission for their input and guidance for the consultants regarding the Design Guidelines in related to signage.

Commissioner Funk noted that pictures of the buildings and discussions are repeated and she would like to see other examples of buildings throughout the document.

Chairperson Lloyd discussed a conversation that he had with Mike Akerlow who represents the Small Business Advisory Board. He stated that they requested an opportunity to review the guidelines. He inquired if the Commission could offer some information to the Board regarding the historic districts.

Janice Lew noted that she had provided a presentation to the Business Advisory Board.

Ms. Lew inquired of the Commission if it is appropriate in these areas to use substitute materials such as a missing cornice or would the Commission prefer stating using original materials.

Commissioner Harding noted that it is difficult to tell if the materials are actually the original materials. She suggested that it might be a good idea to enforce staying with a certain material.

Ms. Lew noted that an example of materials could be fiberglass columns on porches and asked the Commission if that would be an appropriate direction.

Commissioner Funk commented that it might not be possible to define the specific materials to be used, but did say that if the appearance is similar, it would be appropriate to allow different materials.

Commissioner Oliver commented that materials could be listed, but do allow for some leeway.

Commissioner Hart stated that it should also stated, *where appropriate, where possible, use historic materials.*

Commissioner Oliver noted that in deterioration of historical materials they deteriorate naturally whereas other materials do not deteriorate the same and can cause confusion and draw attention.

Commissioner Lloyd noted that in cement board-siding and cement board detailing it shows aging. It does not age or wear like wood.

Ms. Lew inquired of the Commission as to them considering non-historic materials in certain situations.

Commissioner Oliver agreed it is appropriate in certain situations, but they are so specific it would be difficult to explain.

Ms. Lew suggested soften the language regarding the situations and materials.

Ms. Lew inquired of the Commission on their input of the issue of gutters.

Commissioner Lloyd noted that on page 43 in his copy, the sentence is chopped off and it should be continued. He also continued that round gutters are preferred, but K-style is acceptable.

Commissioner Oliver noted that where the gutters drain is important. She noted that if gutters obscure such things as rafter tails that issue is more important than the gutter shape. She also objects to the picture on page 43 that the appropriate downspout is draining into the foundation, which causes erosion.

Commissioner Lloyd inquired if the Commission will be able to see the photos that the consultants are planning on using.

Commissioner Oliver noted that the problematic areas are drainage, which is the source of deterioration. She suggested that the consultants include a bullet points regarding drainage.

Ms. Lew introduced the portion on signage. She asked the Commission if there should be different regulations for different areas and, if it is possible, for this to be addressed in the new guidelines.

Commissioner Oliver suggested a history of downtown Salt Lake City signage as an example. She commented that the consultants should take an inventory of the signage in the different districts.

Ms. Lew informed the commission that the purpose of this discussion is to garner feedback and direction from the latest copy of the design guidelines.
Janice gave a PowerPoint presentation that outlined the Design guidelines.

Public commentary:
Cindy Cromer spoke, stating that she appreciates that the design guidelines were "less bad" than she had anticipated, and would like to propose that in the future the Planning Department hire locally, and that the City's staff is best qualified to provide these documents. She also noted that she appreciated Ms. Lew's efforts to make the changes that she had suggested, and also noted that there were also other comments submitted electronically.
Ms. Cromer also stated her appreciation of Chairperson Lloyd speaking to the Business Advisory Board.

Discussion:
Commissioner Oliver made the following points, compartmentalizing her comments into five categories:
1. Basic Formatting: Typographical errors, missing or incorrect addresses and inconsistencies, uses of acronyms, i.e. explaining what they mean and basically making it more user friendly.
2. Organization: Rearrange items for usability.
3. Content: Very little attention is given to office buildings, commercial use needs more focus.
4. Audience: Who is reading this? Who should be? Be clear in the introduction who the document speaks to.
5. Referrals: A segment should be included that indicates that professional help is available.

Commissioner Carter wanted it made clearer that the guidelines are tied to the Secretary of the Interior's Standards, referring to the Standards for Rehabilitation in Historic Districts document and that it impacts tax credit and that more people qualify.

Commissioner Bevins noted that he found it helpful in referencing to items brought before the board.

Language of the Guidelines was discussed.

<u>May 19, 2010</u>

Staff Presentation 9:44:27 PM
Ms. Lew noted that staff had given the consultants a list of comments from staff and from the Commission and they had reworked the document to include changes prompted by these comments.
Ms. Lew noted that there were still a number of editing issues to be addressed.

Questions for Staff from the Commission 9:45:19 PM
Commissioner Harding noted that on page 54 there was an incomplete sentence regarding stairways. She also noted that several of the addresses were incorrect or incomplete.
Vice Chairperson Oliver noted she had not had a lot of time to look at the document but noticed that some of the same inconsistencies still existed that she had noted in the previous draft.
Ms. Lew noted that if the Commission had any further comments, they should forward those to her by Monday, May 24th, 2010.

Public Hearing 9:48:14 PM

Commissioner Funk noted that the regulations regarding signage on a window needs to be clearly stated in reference to percentage, etc.

Commissioner Oliver suggested that signage should be broken into categories: historic, new construction, adaptive reuse, commercial buildings in residential neighborhoods, etc. She also suggested using different types of neighborhoods and eras as categories.

Commissioner Harding suggested reviewing other City ordinances regarding signs.

Commissioner Hart suggested using Sterling Furniture in Sugarhouse as an example of needing signage guidelines.

Ms. Lew asked the Commission if internally illuminated signs were appropriate and Commissioner Hart and Commissioner Funk noted that they were not appropriate for the historic districts.

Ms. Lew asked if this document should be a standalone document organized by building and neighborhood types and eras. She noted some questions she had regarding Master Sign Plans and identifying signage location early in the design process. Other items included treating retail office spaces differently, and considering contributing versus non-contributing buildings.

Commissioner Lloyd noted that signage depends on the context of the sign. He suggested that other cities standards would be helpful in addressing unique conditions. An example would be a 1950s interiorly illuminated sign would be preserved without setting precedents for big box retailers to place signs on blank walls.

Commissioner Oliver agreed with Commissioner Lloyd about context. She noted it should be stated as an overriding principle to the context of the block face that may override other things stated in the specific guidelines.

Ms. Lew inquired if what the Commission is requesting is more general than detailed. Commissioner Harding agreed.

Pat Comarell, Assistant Planning Director, asked the Commission if there were historic signs which need to maintain and reused e.g neon

March 3, 2010

PLNPCM2009-00638 Commercial Design Guidelines – The Salt Lake Planning Division has hired consultants Thomason & Associates to create a new section for the design guidelines used by the Historic Landmark Commission to make design review decisions for properties with local designation, currently the design guidelines are for residential properties only. This supplemental information will provide guidance for commercial properties. The draft document is available at the City's Web site at www.slcgov.com/ced/planning (Recent Projects). No final action will be made by the Historic Landmark Commission at this meeting.

Chairperson Lloyd recognized Janice Lew as staff representative.

Cindy Cromer, 816 East 100 South, noted that she felt there had been a huge improvement in the document, particularly in the sections on signage, ADA Compliance and Windows and with the added historic photos, but that there were still issues with the draft. She noted that in particular, the Commission should address the text about sandblasting indicating that an expert should be hired when sandblasting occurred. Ms. Cromer submitted a letter for the record reviewing her concerns. That letter is included with these minutes.

Executive Session 9:52:02 PM
Ms. Lew noted that as far as the adoption timeline was concerned, staff was trying to figure out additional changes to forward to the Consultants. She noted staff would try to get the final draft onto the June 19th agenda to move the item forward to the Planning Commission and City Council.

Commissioner Richards noted that the language for compatible infill needed to be elucidated further as it was very vague as it currently stood.

Attachment D
Consultant notes

Historic Landmark Commission Discussion of Commercial Design Guidelines – Rehabilitation (Pgs. 1-33)
September 2, 2009 Meeting Notes

Future Meeting Dates
October 7th
November 4th

Follows is a summary of the comments made by the Commissioners. Please use the comments listed below and the attached markup to revise the working document.

Summary of Comments:

OVERALL APPROACH AND FORMAT

- Provide general language about the purpose of the design guidelines to help guide change
- They are an aid...
- Mechanisms for flexibility, where is the carrot (federal tax credit)

SECRETARY OF THE INTERIOR'S STANDARDS

- Reference illustrated version and provide website.
- IEBC – included by reference although not adopted by City (I will check to see how this might be addressed.)

SUSTAINABILITY

- Add this section as it relates to historic preservation. What does it mean?

SITE FEATURES

- This section speaks to what has been lost. Access needs, parking, and other conditions that have changed are not really addressed (ie South Temple)
- Illustrations – 1980's type illustrations that do not reflect careful content of the design guidelines

STOREFRONTS

- ADA issues – reference to later section
- Lighting – compatible with sustainability in regards to re-lamping
- Pg. 14 – Existing language limiting, include more modern window treatments steel, aluminum
- Pg. 15-Door replacement – more clear as to when it is appropriate Pg. 17 - "Matching period and style" – should speak of its own time and consistent with philosophy of other language in document

PRIMARY MATERIALS

- Larger range of materials to address modern construction and buildings coming of age
- Paint on compromised brick – appropriate treatment: when painting is an option, water repellant coating treatments. Park service and list of professionals references
- Pg. 22 – conflict with mortar treatment (hard) for modern buildings

WINDOWS

- Missing discussion on true divided light, preference for in kind.
  Simulated ok if bonded to glass with spacer, interior and exterior grids with the right profile.
- Needs to talk about more modern materials include steel, aluminum, bronze, and others. May include discussion of poor performance of these modern materials.
- Pg. 33-Preferred materials expanded (not just wood)

General Comments

- The design guides should be explicit in service to the person trying to use the document
- Commercial additions on residential properties – Use residential design guidelines for residential portion of building and commercial for addition
- Not seeing a lot of help for dealing with the modern era. It addresses older smaller buildings, but does not fully address those of a modern age. These have different standards and aesthetic values including bigger buildings, philosophy of retailing, office uses, and changes in use. For example, if the Public Safety Building (mid-century building) came to the commission, do the design guidelines help and provide sufficient flexibility for adapting a building to another use?
- Text is redundant in places.
- Insert abbreviated text in references to residential design guidelines for ease of use, but not too large of a document.
- May us good photographs of buildings that have been demolished to avoid overusing photos of the same buildings.

Historic Landmark Commission Discussion of Commercial Design Guidelines – Additions and New Construction (Pgs. 34-72)
October 7, 2009 Meeting Notes

Future Meeting Dates
November 4th

Follows is a summary of the comments made by the Commissioners. Please use the comments listed below to revise the working document.. I will also provide a markup of this section of the working document soon.

In addition, please provide a copy of the most recent revisions to the working document to supplement the October billing.

Summary of Comments:

ADDITIONS

- Background – Text is redundant in places. Use this section to identify the types of additions that may be considered or reorganize section.
- Emphasize mass and scale which is the destroying factor
- Echo, acknowledge, or use a modern interpretation of elements such as moldings, cornices and fenestration pattern.
- Recognize historic use and additions that have acquired significance and maintain integrity. But allow flexibility in rehabs for poorly constructed additions and not be trapped by 50 year benchmark.
- Provide directive for commercial buildings converted to residential uses as in photo on pg 46,use commercial design guidelines for storefronts
- Address small commercial in residential neighborhoods – noise from systems, air conditioning, HVAC as well as design (throughout document and upfront)
- Additions need to be a product of their time

ACCESSIBILITY

- Conflicting language regarding materials. Incorporate flexibility – need a place for wood construction and substitute materials (compatible in design). These are reversible and may go away over time.
- Are there other approaches for accessibility than ramps?

SEISMIC

- Why would you make this reversible?
- Do the least amount of damage possible (Put into bold part)

NEW CONSTRUCTION

- Respect and emphasize size and scale which is the destroyer, echoing some of the historic building patterns
- Do not want really restrictive language that forces a building to be average
- Leave material language vague for longevity of document. Wood is not the predominate primary building material.
- Street lighting – Reference neighborhood lighting appropriate to design and scale of neighborhood
- Architectural character – To specific and restrictive. New architecture that does not imitate a historic style or period of architecture
- Address site lighting – compatible and appropriate for surroundings

SOLAR

- Not too restrictive because technology is changing quickly – appropriate and compatible
- Most appropriate when placed in roof lines if readily visible

General Comments

- Soften language (less definitive) - use "preferred" if it can be shown how it relates
- Want to encourage creativity

Historic Landmark Commission Discussion of Commercial Design Guidelines –Rehab Standards (Pgs. 35-44), and Signage (Pgs. 78-87)

November 4, 2009 Meeting Notes

Follows is a summary of the comments made by the Commissioners. Please use the comments listed below to revise the working document. I will also provide a markup of this section of the working document on Monday.

Summary of Comments:

ARCHITECTURAL DETAILS

- Some flexibility in certain situations to consider non-historic materials. But other materials do not age the same and may cause confusion and draw attention.

ROOFS

- Half round gutters preferred, but K-style gutters are acceptable
- Obscuring architectural features is a more important issue than the shape.
- Page 43 – picture shows downspout draining into the foundation.
- Include design standard about irrigation systems.

SIGNAGE

- Need a history of downtown Salt Lake City signage (historic photographs included)
- Approach - discussion needs to be more general than detailed.
- Breakdown into categories:
  Historic
  New construction
  Adaptive reuse
  Commercial buildings in residential neighborhoods
  Offices
  Reuse of historic signs
- Check other cities to see how they address unique conditions.
- Minor inventory of signs in the different districts – context is the overriding principle (block face).
- When did they start marking internally illuminated signs? These may be appropriate for a building of this era.

General Comments

- Working document is repetition in pictures of buildings and text.

COMMERCIAL DESIGN GUIDELINES **Consultant Notes** **3/19/10**

Follows is a summary of the comments made by the Commission and Staff. Please use the comments listed below and the attached markup to revise the working document. Please include and/or address the following points:

Structure, Organization & Usability

- General organization - follow the organization of the Residential DGs, with History in the 1st section and Building Types & Architectural Styles in the following distinct section.
- Provide a front cover for the document, to include the title, 'draft' and photographs/illustration/s
- Provide inner cover page, with title, draft & date, & prepared by ....
- Table of contents - with page numbers for each section
- Acknowledgements
- Number all pages (footer)
- Number all Sections & all DGs reflecting organization and structure of Residential DGs
- Align page design and margins to reflect 'full page spread' of final document
- Establish a consistent hierarchy of Headings, Sub-headings & Sub-sub-headings (using different font point sizes) to ensure immediate understanding of how the intro/reasoning and text all relate
- Index - at the end of the document
- Include Glossary of Terms
- Organization of the DGs – would benefit from linking the introductory (policy & background) text to each section of the topic guidelines.
- Re-title "Overall Approach & Format" as 'Preservation in Salt Lake City' (consistent with Residential DGs)
  - Include section on "Who Should Use" inc. table (see Residential DGs), setting the Comm. DGs in the context of the Design Guidelines series for the City, and identifying/clarifying where the Commercial and where the Residential DGs should be consulted (and where these will be used by the Commission).
    - Owner of commercial property built as commercial property, whether in a commercial district or residential area
    - Owners converting former commercial building back to commercial use
    - Owner converting a commercial building to residential use
    - Not owners converting residential to commercial, they will need to follow residential guidelines (move language on p. 49 to p. 2)
    - Office buildings and medical complexes – missing category of buildings that should be covered in all sections
  - Include paragraph on seeking professional assistance (repeat this as a side bar elsewhere in the document)
    - e.g. The repair, maintenance, and replacement of historic building materials may often require specialized knowledge or expertise of historical architects, architectural conservators, specialized contractors, or other historic preservation professionals when planning and executing this type of work.
    - e.g. p 40 – Cleaning – For more complicated situations, consult with an architectural conservator, historical architect, or contractor with extensive experience working with historic buildings.
    - e.g. p 40 – Repairing - It may be necessary to consult with a historic architect, architectural conservator, or experienced contractor to determine the appropriate treatment.
  - Include section on "How to Use This Document" – see Residential DGs
  - List all other relevant City resources & documents (see Residential DGs – area plans, NR nominations)
  - Add brief summary of character-defining features and typical types of commercial properties found in each district
- Section Order:
  - Section on S of I's Stds should precede Tax Incentives
    - Include RDA

      Historic Preservation Tax Increment Reimbursement Program

      The Redevelopment Agency of Salt Lake City (RDA) will reimburse property owners or developers for costs associated with historic preservation. Buildings located in a RDA Project Area and listed

on the National Register of Historic Places or the Salt Lake City Register of Cultural Resources are eligible for tax increment reimbursement up to 50% of the cost of renovating to a vanilla shell status. Plans for the exterior renovation of the building must be approved by the State Historic Preservation Officer. The reimbursement is generated from the increase in property tax assessed as a result of the building improvements. For more information contact the RDA at (801)535-7240 or www.slcrda.com.
    - Place Architectural Styles section after the pages dealing with Neighborhood Shopping-House Stores to ensure that all Building Types are addressed before Architectural Styles
    - Section on signage should come after section on Rehabilitation
    - Section on Fire Escapes should be subdivided between retention of historic which should reside within the Rehab DGs, after Decks, and new FEs which should be within the New Construction DGs in an expanded section dealing with 'Mechanical Equip. & Fire escapes'
    - Include conversion section in first part of document (p.49)
- Use a single header & footer to identify document & section, eg. The name of the document and page number as a footer, with the name of the section and topic heading in the header (see Residential DGs)
- Site Features: no structure or sub-heads
    - Consistent use of 'site' not landscaping
- Move mid-century material language from p.28 to p.21

Consistency, Formatting & Duplication

- Acronyms – define these where used for the first time.
- Consistent use of 'façade'
- Standardize the use of street addresses.
- Review for and correct all 'typos' - see detailed notes
- Ensure consistency in all headings, sub-headings, etc. throughout the document. Some s/titles not in bold e.g. p.7 & 9 districts section, headings vary in font, case & size across the sections of the document
- Repetition – avoid throughout the document:
    - Text repetition, e.g. in first paragraph p.12
    - Photo repetition, e.g. pp 19 & 4(districts) and elsewhere (use details from buildings if no other photos are available
    - Repetition in some coverage between building types & styles
- Photos – ensure consistent spacing, relationship to text, alignment & orientation:
    - Improve vertical and/or horizontal alignment of photo subject within the photo frame, e.g. Site Features opening page
    - Avoid overlap of photos, and photos with text, e.g. p.4 of Districts section Ensure consistent spacing of text & photos, e.g. pp. 8, 19, 28, etc.
    - Enhance photo content of the Districts section (e.g. historic views, before & after views?)
- Captions:
    - Ensure captions relate to and supplement adjacent text & consistency – use them as part of the commentary and guidance
    - Focus caption content as a part of the supplementary information for the Design Guideline in each case
    - Reduce font size to ensure captions read as captions and are not confused with the adjacent body of the text
    - Align caption consistently with the left hand edge of the photograph or drawing
- References to RDGs – no italic page numbers

Tone & Content

- Avoid use of 'passive voice' in wording of the DGs. Use 'active voice' throughout, e.g. "Maintain ....", "Preserve ....", etc
- Include Office and medical complexes as a building category
- Include more coverage on mid-century architecture
- Include bullet list of typical building types found in each historic district

- Need introductions for S of I Stds, Tax Incentives & Solar Stds
- Include 'xeroscaping' as an appropriate planting/landscaping direction
- Expand coverage of materials, with specific reference to mid-C20 architecture
- Use side bars at the start of each section listing contents, & for additional quotes or items of note, cross reference or links
- Revise 'Brick and Masonry' section (p. 25)
  - e.g. Soft mortar with a high ratio of lime was traditionally used in masonry buildings constructed prior to the 1930s. Relatively low proportions of Portland cement were used, if any. Harder mortars appear in more modern buildings. New mortar should match the original mortar in width, depth, color, joint profile, and texture. When repointing historic mortar, it is important to use a mix this is softer and more permeable than the masonry units to ensure the preservation of the historic masonry.

    Impermeable modern mortar can be inappropriate for repointing older brick and stone because they may force moisture to pass through the more permeable masonry rather than the mortar. Mechanical stresses caused by expansion, contraction, settlement, and water-driven deterioration mechanisms like freeze-thaw will also be relieved in the masonry rather than the mortar if the latter is harder than the former. Modern mortars may also contain harmful soluable salts that further accelerate brick and stone deterioration.
- Enhance wording on window policy & importance - & change emphasis & organization of section
- Inclusion of Maintenance Tips notes – as footnote or side-bar?

Attachment B

June 16, 2010 Minutes &
July 9, 2010 Consultant Notes

Motion 8:04:35 PM

In the case of Petition PINHLC2010-00265, Commissioner Funk made a motion to approve the side addition design and new garage pursuant to the findings, analysis and conditions of approval listed in the staff report as follows:

1. **All exterior siding shall have a smooth finish. No rough cut or faux wood grain imprints are permitted.**
2. **The applicant shall reapply the limestone veneer removed to accommodate the addition on the new side walls.**
3. **All exterior colors and materials for the addition area shall be designed and constructed to match the existing colors and materials of the original home.**
4. **Prior to the issuance of a building permit, the applicant shall resolve all rear setback issues with regard to the garage. This may require administrative approval or a special exception.**
5. **The addition must meet all other applicable Zoning Ordinance requirements, including setbacks, maximum footprint and lot coverage. Any request for an exception to these rules shall require additional review and approvals as dictated by the Zoning Ordinance.**

Commissioner Hart seconded the motion.

Discussion of the Motion 8:05:12 PM

Commissioner Richards inquired if condition number three was necessary as the Commission did not normally review color.

Mr. Milliner noted that it had been included more to ensure compatibility of the addition with the original structure, but could be changed if the Commission wished to do so.

Commissioner Richards noted he felt the condition was fine as it stood.

All voted "Aye". The motion carries unanimously.

PLNPCM2009-00638, Commercial Design Guidelines – The Salt Lake City Planning Division has hired consultant Thomason & Associates to create a new section for the design guidelines used by the Historic Landmark Commission to make design review decisions for properties with local historic designation. Currently the design guidelines are for residential properties only. This supplemental information will provide guidance for commercial properties. The draft document will be available at the City's Web site at http://www.slcgov.com/boards/HLC/hlc-agen.htm. The petition requires the Historic Landmark Commission to forward a recommendation to the City Council. (Staff contact: Janice Lew, 801-535-7625, janice.lew@slcgov.com)

Staff Presentation 8:08:47 PM

Ms. Lew noted that the Design Guidelines would build upon the existing Residential Design Guidelines, but focus upon city historic commercial resources. She noted that the Zoning Ordinance did not provide specific standards for adoption of guidelines.

Ms. Lew briefly noted the history of the proposal specifically that City Council first held a briefing with the consultants in which they presented the first draft to Council members. She stated there had

subsequently been a public workshop, and then the Planning Division had held an open house in June of 2009, where no public input had been received. Ms. Lew stated that several meetings have been held as well as public hearings in order for staff to receive feedback and comments regarding the draft guidelines. She remarked that the draft had also been presented to the Business Advisory Board twice and once to the Downtown Alliance.

Ms. Lew noted that the last list of comments given to the consultant for the Commercial Design Guidelines had been included in the packet and staff intended to continue to refine the document and address these outstanding concerns prior to the document's submission to City Council. Ms. Lew stated that staff had included several potential motions in the attached staff report for the Commission to consider.

Questions for Staff from the Commission 8:13:11 PM

Commissioner Richards noted that he would like to see the final draft before providing a recommendation to City Council.

Ms. Lew noted that they had forwarded the requested changes to the consultant and that staff was also working to amend the document.

Motion 8:15:30 PM

In the case of petition PLNPCM2009-00628, Commissioner Harding moved to table the item until a final version could be presented to the Commission in its entirety. Commissioner Richards seconded the motion.

Discussion of the Motion 8:16:01 PM

There was no discussion of the motion.

All voted "Aye". The motion carries unanimously.

OTHER BUSINESS 8:16:26 PM

There was no further business.

Vice Chairperson Oliver made a motion to adjourn. There was no objection. The meeting stood adjourned at 8:16:31 PM.

Cecily Zuck, Historic Landmark Commission Secretary

COMMERCIAL DESIGN GUIDELINES **Consultant Notes** **7/9/10**

Follows is a list of items relating to the April 16, 2010 draft that should be included and/or addressed prior to Planning staff resubmitting the document to the HLC for final approval. Please note that the attached April 16, 2010 draft includes changes made by staff. In addition, please provide a response or address those items included in the attached Consultant Notes dated 3/19/10 that were not addressed in the April 16th draft. This will be considered with your request to disburse additional funds since the document does not appear to be more than 95% complete at this time.

Structure & Format

Front Cover

- Ensure all photographs are aligned and equally spaced.

Hierarchy of Titles & Headings

- Create and maintain a consistency and a hierarchy of Titles, Headings, Sub-headings, etc. There are many places where this needs to be either achieved or corrected, e.g. Signs section and rest of document, New Construction section, and other instances as defined below.

Page Layout

- Page Layout - Raise Header text & lower Footer text to avoid crowding the page content.
- Footer should identify the document (as is) while Header should identify the section or Design Guideline topic (as in the Residential DGs).
- Raise the underlined titles at the top of each page, create more space between title and line, and reduce point size of text (again reflecting the page proportions of the residential DGs).
- Page numbering should be on the outer corner of each page.
- Footer text should read: "Design Guideline for Commercial Historic Properties in Salt Lake City" to reflect the title and to echo the Residential DGs format.
- Where photographs appear above or below the block of text the edge of photo should align with the edge of the text to define and complete this margin (as with the Residential DGs).
- Similarly, place photographs to define the margin on the other side of the page, where possible (as with the Residential DGs).

Illustrations & Captions

- Define photographs with a fine line framework to avoid losing these where they turn white (as with the Residential DGs).
- Define drawings with a fine line framework (as with the Residential DGs).
- Maintain a consistent minimum space between photographs, to avoid what happens on p.49.
- Ensure that the space between photographs and captions are consistent, e.g. current pp.29 & 44 the caption text runs into the photographs.
- Ensure that there is a minimum distance between photographs and text – in some instances these are too close, e.g. pp. 69, 75, 93, 96.
- Captions:

1. Reduce point size of text.
2. Align captions with left edge of photograph/illustration where the captions appear below (both to reflect the format and design of the Residential DGs).

3. Maintain a consistent space between the caption and the bottom of the photograph.

Sections

- "**Preservation in Salt Lake City**" should be preceded by a section title page (with Title and photograph) to reflect the design and format of the Residential DGs, and this should open as page 1. The text for this section should begin on the next facing page, i.e. p.3.
- Ensure consistency in spacing between paragraphs, e.g. current p.3.
- Ensure consistency in spacing between sub-headings and following or preceding paragraph text, e.g. current pp. 4, 6, 53, 54, 89 & 90.
- There are captions for several photographs, although the photographs do not appear above these captions in this draft, e.g. pp. 8, 9 & 10.
- The **Building Types and Architectural Styles** section should have a photograph on its title page (p.24). The following page should include a table of Contents for this section, reflecting the format of the Residential DGs.
- Ensure that the Headings for this and other sections are consistent in their design, weight, font size and spacing relative to the following text.
- Define in Bold & avoid the use of Italic for the headings in Types section (reflecting the design of the Residential DGs).
- The **Rehabilitation Standards for Commercial Historic Properties** title page should be followed by a table of contents for the Rehab section (reverse side of this page), with photo captions below (as reflected in the Residential DGs).
- Number all Design Guidelines - reflecting the classification/format used in the Residential DGs (i.e. reflecting the chapter # & DG #).
- Maintain a space between the heading for each of the guideline topics and the series of guidelines, e.g. contrast & inconsistency between p.60 onward and preceding DGs section. Ensure all of these headings are in bold, e.g. again p.59 & p.60, p.67 & p.68, p.76 & p.77, p.138 & p.139.
- Place margin notes within a fine line framework (as with the Residential DGs), e.g. pp. 92 & 98 (both of these should read "...contract**or**...", rather than "...contract...").
- The **Standards for Signs** title page should have an opening photograph and be followed by a table of contents for the Signs section (reverse side of this page), with photo captions below (as reflected in the Residential DGs).
- Signage Section: Headings & sub-heads here appear to differ from other sections – ensure consistency.
- The **Standards for New Commercial Construction in Historic Districts** title page should be followed by a table of contents for this section (reverse side of this page), with photo captions below (as reflected in the Residential DGs).
- The headings for the introductory design discussion of this chapter are inconsistent with the headings used elsewhere in the document - point size is too large, e.g. pp.121-124.
- Ensure consistency of headings, e.g. text on p.127 is not in bold.
- Title Page for **Historic Districts** should have one or more photographs (current or historic), with Table of Contents on the reverse side.
- Start each historic district section on a new page.
- Ensure that point size of text is consistent with the rest of the document – too small as currently drafted.

Content

- Include section on "Who Should Use" and identifying/clarifying where the Commercial and where the Residential DGs should be consulted (and where these will be used by the Commission).
  - Owner of commercial property built as commercial property, whether in a commercial district or residential area
  - Owners converting former commercial building back to commercial use
  - Owner converting a commercial building to residential use
  - Not owners converting residential to commercial, they will need to follow residential guidelines
- Office buildings and medical complexes – missing category of buildings that should be covered in all sections.
- Include paragraph on seeking professional assistance (repeat this as a side bar elsewhere in the document). e.g.
  - masonry
  - seismic
  - primary materials
- *Which Chapters Apply To Your Project* (reflecting the design of the Residential DGs).
- p.62 – dangling sentence.
- p.80 – address seismic issue as it relates to cornices.
- p.93 – cross-reference fire escapes.
- p.97 – include refer to State History's *Bracing for the Big One.*
- p.111 – address installation of signs.
- p.113 – addresses historic buildings more than new construction.
- p.138 – repetitive.

Consistency

- Standardize the use of street addresses.
- Review for and correct all 'typos' - see detailed notes
- **Tone &** Avoid use of 'passive voice' in wording of the DGs. Use 'active voice' throughout, e.g. "Maintain ....", "Preserve ....", etc
- Use commas between items in a series – series of three or more items should have commas after all but the last item.
- Capitalization – "City".
- Spacing.
- Nineteenth, 19th or 19th.
- Pounds or lbs.
- Mid 20th or Mid-20th.
- Remove all 'shall' language.
- Replace 'standards' with 'guidelines'

Photos and Illustrations

- p. 4 - Photo does not relate to text.
- p. 26 – need address.
- p. 51 – add photo of Elks Club Building.
- Definitions – add illustrations.

- Clearly identify inappropriate photos and illustrations.
- Include 36 S 1200 East photo.
- p.68 – address (University)?
- p.71 – include another illustration showing sash, weight and cords etc.
- New Construction – better photo.
- p. 131 – encourage more contemporary designs that complement historic fabric not replicative.
- p.132 – better photo.
- Compatible new along side of historic buildings.
- p. 146 – University Pharmacy photo.

General

- Links to all photos
- Two- sided printing capability (blank pages where needed).
- Accurate references to RDGs.

Planning Staff Refinement

- Definitions
- Signs
- Districts
- Photos

Attachment C
Final Draft Design Guidelines

Design Guidelines for Historic Commercial Buildings and Districts in Salt Lake City





Design Guidelines for Historic Commercial Buildings and Districts in Salt Lake City

(Date of adoption)

Prepared for the
Salt Lake City Corporation
By
Thomason and Associates
Nashville, TN

CREDITS

SALT LAKE CITY

Historic Landmark Commission
Earle Bevins III
Bill Davis
Arla Funk
Sheleigh Harding
Polly Hart
Creed Haymond
Warren Lloyd, Chair
Anne Oliver, Vice-Chair
Dave Richards
Thomas Carter

Planning Division Staff
Wilford Sommerkorn, Planning Director
Patricia Comarell, Former Assistant Planning Director
Joel Paterson, Planning Manager
Nick Norris, Planning Manager
Janice Lew, Senior Preservation Planner
Carl Leith, Senior Preservation Planner

Redevelopment Agency of Salt Lake City
D. J. Baxter, Executive Director
Edward Butterfield, Project Coordinator

OTHER RESOURCES

Historic photos courtesy of the Utah Historical Society

CONSULTANTS

Thomason and Associates

This project was funded in part by an allocation from the Redevelopment Agency of Salt Lake City's Board of Directors.

TABLE OF CONTENTS

WHICH CHAPTERS APPLY TO YOUR PROJECT

Use the chart to identify which sections may be most relevant to your project. (Note that other sections may provide supplementary or additional information and guidance.)

Sections to use	Preservation in Salt Lake City, Page 1	Architectural Styles of Salt Lake City, Page 21	Rehabilitation Guidelines for Historic Properties, Page 51	Guidelines for New Construction, Page 1119	General Design Guidelines, Page 131	Historic District s, Page 147
Type of work:						
To remove or alter a historic property:	X	X	X		X	X*
To construct an addition to a historic building:	X	X	X		X	X*
To alter a non-contributing building in a historic dictrict:	X	X		X	X	X*
To construct a new building in a historic district:	X	X		X	X	X*
To make site improvements to a historic property:	X	X	X		X	X*
To make site improvements to a non-contributing property in a historic district:	X	X			X	X*

This section will be relevant if the property is located within a locally-designated historic district.

WHO SHOULD USE THESE DESIGN GUIDELINES

Sometimes a building's original use changes over time. For example, a historic school building might be converted for multi-dwelling residential use. It is possible that such adaptive re-use of a building will remove it from the original context of its surrounding neighborhood or district. The following list identifies property types and/or contexts to help property owners determine if they should refer to these guidelines:

- Owner of a commercial property built as a commercial property, whether in a commercial district or residential area.
- Owners converting a former commercial building back to commercial use.
- Owners converting a commercial building to residential use.

Owners converting a *residential* property to commercial use will need to refer to the residential guidelines.

PRESERVATION IN SALT LAKE CITY

New York Hotel, 60 W Market Street

CHAPTER OVERVIEW

This manual lists design guidelines for commercial properties with local historic designation. Included in this manual is information on common rehabilitation questions, recommendations for maintaining the site and setting of historic properties, and guidance for new construction. Photographs of buildings and architectural details in Salt Lake City are included to familiarize property owners with typical features and characteristics.

Buffalo head anchor at New Grand Hotel 369-379 S Main.

Design guidelines serve as a planning tool for property owners as they prepare to make improvements to their properties. The purpose of design guidelines is to provide recommendations that promote preservation of historic resources and ensure that their essential historic character is maintained. Design guidelines provide practical assistance and direction to assure that improvements are compatible with the goals and desires of property owners and the City. Design guidelines assist property owners in maintaining and enhancing the appearance of their properties, keeping up property values, and improving the livability of historic areas.

The main emphasis of the Salt Lake City Commercial Design Guidelines is on preservation rather than complete remodeling. This emphasis is reflected through the use of terms such as *repair, retain, maintain* and *replace in kind*. Certificate of Appropriateness (COA) applications, forms submitted to the City for proposed work on historic buildings and buildings located within local historic districts, will be reviewed with the following approach:

122 W Pierpont Avenue.

- Property owners are encouraged to first consider preserving, maintaining and repairing original or historic building features. Rehabilitation that does not necessitate removal of significant historic elements is an asset.

- If such features and elements cannot be preserved, maintained and repaired, then replacement in kind is recommended. Replace materials with the same materials and with profiles, dimensions and textures to match the original as closely as possible. Historic architectural details and materials can be documented through historic and/or physical evidence. Such documentation will aid in defining appropriate rehabilitation activities.

CHAPTER OVERVIEW

- Rehabilitation of historic buildings is reviewed to determine impact, compatibility, and appropriateness of proposed work to the existing structure, site, streetscape and district.

- Ensure that rehabilitation is compatible with the historic building or structure for which it is proposed. Compatible rehabilitation efforts are those that protect significant architectural and historic resources of individual buildings and the district.

The design guidelines also respect the importance of remodeling work or additions that may have significance in their own right. Many properties built in the 19th century were later remodeled in the early 20th century, and these remodels may be significant in reflecting the evolution of the building over time. For example, a ca. 1890 Italianate commercial building might have a storefront that was remodeled in the Modernistic style in the 1930s. Encourage property owners to consider preserving and maintaining these types of features to illustrate the influence of later historical styles.

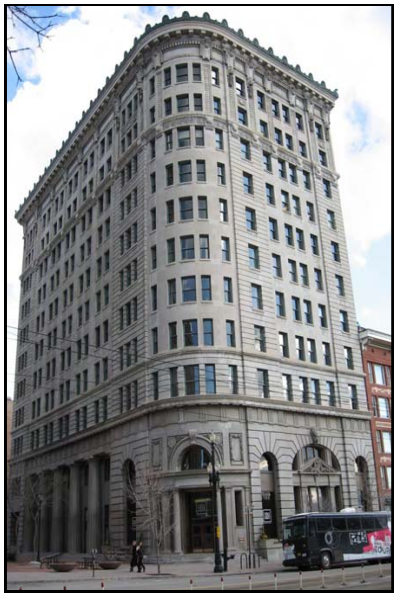

Design guidelines help to ensure that historic buildings such as the Boston and Newhouse Buildings at 9 and 10 Exchange Place retain their historic character and continue to be vital elements in Salt Lake City.

CHAPTER OVERVIEW

Conversion of Residential Properties to Commercial Use

Often properties originally constructed as residential buildings have been converted for commercial purposes. Residential design guidelines will apply to the majority of these properties. If the historic use of the building is as a residence, the building will be reviewed under the current *Design Guidelines for Residential Historic Districts in Salt Lake City*. This includes residential buildings that have been remodeled into offices or other commercial use. However, if a building historically used as a residence undergoes a major exterior conversion, such as the addition of a storefront to the main façade, and its appearance is more in line with that of a commercial property, then the storefront will be reviewed under the City's commercial design guidelines.

A number of neighborhood commercial buildings were converted into residences in late 20th century. This building at 479 N 200 West lost its original storefront and entrance when it was redesigned for residential use.

THE INTERIOR SECRETARY'S STANDARDS FOR REHABILITATION

The Salt Lake City Commercial Design Guidelines follow the guidelines set forth by the National Park Service. Known as the "Secretary of the Interior's Standards for Rehabilitation," these guidelines are used throughout the country by the majority of America's boards and preservation commissions as a basis for local design review guidelines and for projects utilizing federal funds or tax credits. The "Standards" were originally published in 1977 and revised in 1990 as part of Department of the Interior regulations. They pertain to historic buildings of all materials, construction types, sizes and occupancy and encompass the exterior and the interior of historic buildings. The Standards also encompass related landscape features and the building's site and environment as well as attached, adjacent or related new construction.

The "Standards" are available on-line at www.cr.nps.gov/hps/tps. This web site also provides information on technical aspects of restoration and rehabilitation including "Preservation Briefs," which are excellent summaries of various design guidelines and building rehabilitation issues provided free on-line. An illustrated version of the "Standards" is also available in paperback—*The Secretary of the Interiors Standards for Rehabilitation and Illustrated Guidelines for Rehabilitating Historic Buildings* by author W. Brown Morton is available through the National Park Service, and is online at www.nps.gov/history/hps/tps/tax/rhb/index.htm.

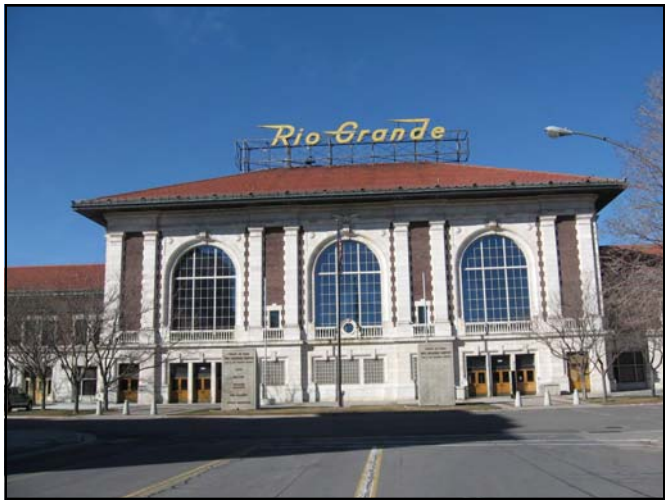

The Denver & Rio Grande Railroad Station at 300 S Rio Grande Street is listed both on the National Register and the Salt Lake City Register of Cultural Resources.

FINANCIAL INCENTIVES

Federal Tax Incentives for Rehabilitation

A federal tax credit is available for properties listed on the National Register if they are used for the production of income. This tax credit is 20% of the total amount expended on the rehabilitation of a property. This applies to rehabilitation for apartments, retail, offices, and other income producing uses. Property owners who wish to take the tax credit must follow established guidelines for rehabilitation. These guidelines, known as the "Secretary of the Interior's Standards for Rehabilitation," are designed to provide guidance in the renovation of historic buildings in order to preserve their historic architectural character. The guidelines prepared for this manual are based upon these standards.

Preservation and rehabilitation of historic buildings can involve added expenses. Costs can be defrayed when property owners take advantage of the following programs.

State Tax Incentive for Rehabilitation

The state of Utah provides a 20% nonrefundable tax credit for the rehabilitation of historic buildings occupied by owners or used as residential rentals. Qualified applicants can deduct 20% of all qualifying rehabilitation costs from their Utah income or corporate franchise taxes. To qualify, a building must be listed on the National Register or be a contributing building in a National Register-listed district, and be used for residential purposes after rehabilitation. For more information on both tax incentives, contact the Utah State Historic Preservation Office at (801)533-3562.

Redevelopment Agency of Salt Lake City (RDA)

The Redevelopment Agency of Salt Lake City (RDA) will reimburse property owners or developers for costs associated with historic preservation. Buildings located in a RDA Project Area and listed on the National Register of Historic Places or the Salt Lake City Register of Cultural Resources are eligible for tax increment reimbursement up to 50% of the renovation costs. Plans for the exterior renovation of the building must be approved by the State Historic Preservation Officer. The reimbursement is generated from the increase in property tax assessed as a result of building improvements. For more information, contact the RDA at (801) 535-7240 or www.slcrda.com.

HISTORIC PRESERVATION AND SUSTAINABILITY

As energy costs increase and resources dwindle, encouraging the preservation of Salt Lake City's historic buildings and districts is one of the best opportunities for sustainable development, meaning development that meets the needs of the present without compromising the ability of future generations to meet their own needs. Historic preservation is a valuable tool for protecting the environmental resources that have already been expended as well as those not yet used. Reusing sound older buildings is much more sustainable than abandoning them or demolishing them. Preserving and revitalizing Salt Lake City's historic buildings is "recycling" on a grand and community-wide scale.

The "greenest" building is one that already exists. Historic buildings represent "embodied energy"—the amount of energy associated with extracting, processing, manufacturing, transporting, and assembling building materials. Embodied energy in historic buildings includes the expense and effort used to fire bricks, cut and tool stone, transport and assemble the wood framing and prepare and apply interior plaster. Conserving historic buildings preserves embodied energy and reduces the need for new materials.

In addition, historic buildings were designed to be energy efficient and can be upgraded to increase energy conservation. Historic buildings, especially those constructed before 1920, are often as energy efficient as new ones. Historic buildings can also be adapted to benefit from new technology. Solar panels are expected to become more efficient in the future and can be mounted on rear roof lines or freestanding in rear yards to provide solar energy to a property. Solar roof tiles or shingles may also be an acceptable alternative for solar heat. These roof tiles and shingles resemble traditional fiberglass and asphalt shingles and may be appropriate for rear roof lines.

Preserving historic buildings also reduces waste in landfills. Construction debris accounts for 25% of the waste in municipal landfills each year (www.thegreenestbuilding.org). Demolishing sound historic buildings is wasteful of the building's inherent materials and strains the limited capacities of landfills. Demolishing a 2,000 square foot building results in an average of 230,000 pounds of waste.

HISTORIC OVERVIEW OF SALT LAKE CITY

Salt Lake City was laid out in 1847 in an orderly plan that anticipated growth. Large blocks were bounded by wide streets oriented in cardinal directions. However, the plan made no provision for a business district. Main Street and other major thoroughfares were lined by residential "inheritances," assigned to residents by the church. Early manufacturing in the agrarian village included scattered sites for milling, furniture making, spinning and weaving, but no central concentration of commercial activity.

Of necessity, a commercial district began to take shape. In 1850 James Livingston and Charles Kinkead erected Salt Lake City's first store on Main Street, and other mercantile establishments soon followed, centered on the west side of Main Street between South Temple and 100 South Streets. These 1850s buildings were either adobe or frame, with adobe most prevalent. For roughly a decade, Salt Lake City's commercial area was contained within a couple of blocks.

This 1909 photograph of Main Street shows the intermingling of earlier two-story commercial buildings with newer, multi-story buildings as Salt Lake City's economy benefited from the construction of rail lines. (Photo courtesy Utah Historical Society)

Fort Douglas opened in 1862, making Main Street and South Temple Street busy thoroughfares as merchants traveled between the fort and downtown and increasing commercial activity along Main Street. Commercial buildings became more refined during the 1860s—generally one or two stories high and one to three bays wide with gabled roofs and extended false "frontier town" fronts that made their roofs appear flat. Establishments included clothing stores, dressmakers and tailors, groceries, dry goods stores, bakers, hotels, restaurants, saloons, a telegraph office, banking, a blacksmith and livery stables.

A wave of growth and change swept through Salt Lake City's commercial community with the completion of the transcontinental railroad in 1869, linking Utah to the rest of the country. With the celebrated driving of the "golden spike" at Promontory Summit just 80 miles away, Salt Lake City gained access to national markets. A more complex economy developed locally, one based on cash rather than trade, and based on capitalism instead of subsistence. Most notably, the presence of the railroad opened the mining industry in Utah, and fortunes were made. Salt Lake City became more urban within a decade.

The railroad also enabled Salt Lake businessmen to keep pace with the architectural mainstream. By the mid-1860s a variety of styles—Neo-Classical, Romanesque and Gothic Revival—were finding expression in the new masonry commercial buildings going up at a fast clip along Main Street.

The Bamberger Building, 163 S Main Street, 1911. (Courtesy Utah Historical Society)

In 1864, Utah's first millionaire, William Jennings, built his Eagle Emporium on the southwest corner of Main Street and 100 South Street. Strongly Romanesque with Neo-Classical elements, the two-story building sported distinctive spires along its roofline. The Eagle Emporium is considered the oldest existing commercial building in downtown Salt Lake City. In 1868, at the request of Brigham Young for a church-sponsored cooperative system, the building became Zion's Cooperative Mercantile Institution's (ZCMI's) first and main store. In 1876, the company constructed a larger building to the north on Main Street that housed a magnificent retail store. In rapid succession, other businesses began to fill in both sides of the street. The west side of Main Street, its numerous brick buildings distinguished by pronounced Romanesque arches, became the commercial center of the territory.

ZCMI, Main Street between 100 South and South Temple Street, 1868. (Courtesy Utah Historical Society)

During the 1870s and 1880s profits from the silver, gold and lead mines surrounding the Salt Lake Valley built the City's early skyscrapers as the commercial district continued to move to the south. By 1880, the core commercial district centered around 200 South. Only ten years later, the City's population had doubled to nearly 40,000, and 300 South had become the City's commercial hub. By 1890, 400 South held that distinction.

During the 1880s, streets were surfaced, masonry replaced wood and adobe construction, and new commercial buildings generally reached three stories. Salt Lake City had lost the look of an agricultural village.

Meanwhile, in the railroad terminal area west of the central business district, Salt Lake businessmen constructed warehouses and light manufacturing plants. This development was concentrated from about 300 West to 600 West Streets. Today, the best concentration of these warehouses from the late 19th century remains as the Warehouse District located between 100 and 200 South and 300 and 400 West Streets.

The Union Pacific Railroad built a depot on South Temple Street, while the Denver and Rio Grande Railroad located its depot on 300 South. A network of rails began to work its way into the City.

By the turn of the century, Salt Lake City's growing commercial district was complemented by impressive civic and religious buildings. The six-spired Salt Lake Temple was completed in 1892. Two years later, the elaborately sculptured Romanesque Revival style City and County Building, which also served as the state capitol, was completed. In 1906, the City saw the opening of a Classical Revival style Federal Building and Post Office. The new Union Pacific Station on South Temple Street featured a slate-shingle mansard roof typical of Second Empire styles and stained-glass windows inside. The Romanesque-style Denver and Rio Grande railroad station completed in 1909 quickly became a city landmark. In 1911 the opulent Hotel Utah, a fabulous example of Neo-Classical style, opened with ten stories and 500 rooms. A beautiful representation of Renaissance Revival style, the Utah State Capitol was completed in 1915.

Skyscrapers, like the 11-story Boston Building (1909), at Exchange Place and Main Street, became more common with the development of a lucrative mining economy. (Courtesy Utah Historical Society)

Commercial building during the early years of the 20th century was no less impressive. As the rising cost of downtown land made buildings taller than six stories desirable and as passenger elevators made them practical, Salt Lake City businessmen hired architects to design buildings of ten stories and more. The remarkable period of Romanesque building in Salt Lake City was over, and early skyscrapers had arrived.

The classically detailed Boston and Newhouse buildings on adjacent corners of Exchange Place were completed in 1910. Hailed as the City's first skyscrapers, these eleven-story buildings employed a protected steel frame and masonry facing. The Boston and the Newhouse were the work of Samuel Newhouse, who used his vast interests in local mining fields to develop a new non-Mormon financial center in downtown Salt Lake City.

The City's most prominent Gentile booster, Newhouse launched a campaign to move the business district in Salt Lake City from South Temple Street four blocks to the south to 400 South. On 400 South, Newhouse not only built the Boston, the Newhouse and the Newhouse Hotel, but he also donated land for the Commercial Club, financed the Chamber of Commerce headquarters and provided land for the Stock and Mining Exchange building.

Mormon-Gentile rivalry had always played a role in Salt Lake City commerce, but in 1910 that rivalry played out in the polarization of two district commercial centers. The Mormon district centered to the north around Temple Square. In counterweight, the Gentile commercial center rested to the south in Newhouse's newly developed Exchange Place.

During this period of rapid growth, even the City's early skyscrapers evinced quickly changing architectural styles. The Kearns Building was completed in 1911 on Main Street. It rises ten stories above the street and is highly decorative in the Sullivanesque manner. Only a year later, the tallest building between the Missouri River and the west coast opened on Salt Lake City's Main Street. The sixteen-story Walker Building had a simpler façade, a harbinger of starker modern design to come.

Commercial expansion fueled by the region's rich mineral resources continued into the 1920s. Meanwhile, the City's population nearly tripled between 1900 and 1930, reaching 140,000. With the rest of the nation, Salt Lake's economy plummeted following the stock market crash in 1929. The value of products from Utah's mines dropped 80% from $115 million to $23 million. By the winter of 1932-33, Utah's unemployment rate was nearly 36%. Understandably, construction of commercial buildings had come to a standstill.

Fortunately, the New Deal brought public works jobs to 30,000 Utahans. A few years later, World War II revitalized Utah's economy with war industries and military installations. Industrial expansion continued after the war, and the City's population by

In addition to downtown, neighborhood commercial buildings were constructed in the early 20th century such as F. J. Lucas Grocery at 267-269 W 200 South, shown in 1909. (Courtesy Utah Historical Society)

1960 reached 189,454. The population of Salt Lake City dropped during the 1960's, mostly because of a trend toward suburban living. Several commercial and service centers were built in the suburbs, drawing businesses and residents away from the downtown area. To help counteract this movement, the Mormon Church invested $40 million in development of a downtown shopping mall, the ZCMI Center Mall.

In addition to the downtown shopping mall, during the 1950s and 1960s, the skyline of downtown Salt Lake City gradually transformed through the construction of modern skyscrapers. The first of these was the First Security Bank Building completed in 1955. This twelve-story building was designed in the International style with a curtain wall of glass, steel, aluminum and porcelain enameled steel panels. Construction of the building set a precedent for other skyscrapers in the City and over the next two decades numerous high-rise buildings were constructed downtown.

The First Security Bank Building at 405 S Main Street was the City's first modern skyscraper.

Salt Lake City's downtown construction boom continued into the 1970s, and in 1972 the twenty-eight-story LDS Church Office Building was completed. This building was distinguished by its vertical emphasis and exterior of quartzite columns and narrow windows. Additional skyscrapers were built over the next several decades.

The 1957 building at 641-645 E South Temple Street displays black marble panels and a sleek exterior.

With the construction of modern skyscrapers, older blocks were razed to make way for new buildings. Many citizens were disturbed by the demolition of irreplaceable landmarks, and a preservation ethic emerged. Salt Lake City took a second look at the City's historic buildings, and classic older buildings began to see renovation. In recent years many commercial buildings along Main Street, Exchange Place and other sections of downtown have been rehabilitated using federal and state tax credits and other financial incentives.

The LDS Church Office Building is one of the City's tallest buildings.

In neighborhoods such as Capitol Hill and the Avenues few new commercial buildings were constructed after 1950. However, in Central City and along South Temple Street, a number of modern commercial buildings were built in the 1950s and 1960s. Influenced by the International Style, these buildings were designed with various exterior materials such as marble and stone panels and with steel and aluminum doors and windows. Most were built with flat roofs and minimal architectural detailing.

BUILDING TYPES AND ARCHITECTURAL STYLES

BUILDING TYPES

Overview

Commercial buildings in Salt Lake City can generally be defined by building types and often by a specific architectural style or style influence. Building types can be categorized by form, massing, door and window openings, and other features that shape the overall arrangement of the façade. The primary façade generally faces the street and serves as the main entrance into the building. Building types may then be embellished to reflect architectural detailing and styles common from its construction period.

The most comprehensive study of commercial buildings is *The Buildings of Main Street, A Guide to American Commercial Architecture* by Richard Longstreth published in 1987. Longstreth's research resulted in the identification of eleven major building types that dominate the country's commercial architecture in the 19th and 20th centuries. Most of these building types are found in Salt Lake City and also reflect a variety of architectural styles.

The one-story buildings at 271 N Center Street (above) and 361 N Main Street (below) are also examples of One-Part commercial blocks.

One-Part Commercial Blocks

Many commercial buildings in Salt Lake City, particularly in residential neighborhoods, can be characterized as One-Part or Two-Part building types. A One-Part commercial building is generally one-story in height and displays a storefront with transoms and display windows resting on bulkheads (the lower panels on which the windows rest).

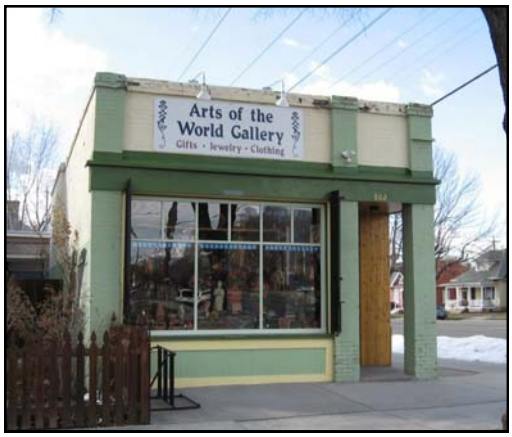

Good examples of a One-Part commercial block is the building at 802 S 600 East.

BUILDING TYPES

Two-Part Commercial Blocks

The majority of commercial buildings in Salt Lake City can be characterized in form as Two-Part commercial blocks. These are buildings which have two primary components – storefronts and upper facades. Original storefronts are largely transparent and consist of display windows resting on bulkheads, transoms, and entrances with glass and wood doors. Upper façades have one or more floors of windows and decorative detailing such as brick, concrete or terra cotta panels and cornices at rooflines. These buildings are generally no more than three-stories in height.

The buildings at 134 W Pierpont Avenue (left) and at 342 W South (below) are representative of Salt Lake City's Two-Part commercial blocks.

BUILDING TYPES

Two-Part Vertical Block

Two-Part vertical blocks are building types of four or more stories constructed as a way to simplify and unify façades as buildings grew taller in the late 19th century. The buildings generally have two zones: the base of the building and the upper façade. The base is usually the storefront or storefront and similar designed second story with a continuous designed façade above. First floors typically served as commercial space while upper floors were used for a variety of purposes, including residential or office use, or additional retail space. The upper façade often repeats the design on each floor and then terminates at the roofline with a cornice or parapet. Numerous examples of this building type can be found in downtown Salt Lake City.

The Felt Building at 335-339 S Main Street was constructed in 1909 and has a separate storefront zone and unified upper façade. The building is distinguished by its glazed terra cotta and arched panels below the cornice.

BUILDING TYPES

Three-Part Vertical Block

The three-part vertical block building is similar to the two-part vertical block except that it has a distinct upper zone of one-to three-stories. This building type is generally associated with tall buildings constructed in the early 20th century. It is related to the designs of architect Louis Sullivan who felt that buildings should have separate zones of base, shaft and capital. Many of the older high rise buildings in downtown Salt Lake City are three-part vertical block designs.

The McCornick Building, built in 1893, is the best available example of a three-part commercial building in Salt Lake City. Although the first floor has been altered, it still retains its distinct treatment of design which provides a definitive first floor zone. Another zone or division is distinguishable in the upper stories with various window arrangements, and a third zone is seen in the seventh floor attic story with a band of rectangular windows.

BUILDING TYPES

Enframed Window Wall

The enframed window wall was primarily used on small to moderate sized commercial buildings. This building type had an emphasis on order and unity by enframing or surrounding the storefront or storefront and upper façade within a wide and continuous design. This is often reflected through the use of a consistent exterior material such as brick, stone, terra cotta or glass panels. On upper façades this enframing was generally around large windows or bands of windows.

The building at 422-426 N 300 West is a one-story example of an enframed window wall plan with a simple brick surround around the storefront.

Another example of an enframed window wall plan is the Felt-Buchorn Building at 445 E South Temple Street. Built in 1959, it displays a continuous surround of porcelain steel panels which frame the display windows and entrance.

BUILDING TYPES

Arcaded Block

Arcaded block buildings are characterized by a series of evenly spaced, rounded arch openings on the primary façade. These arches can be one-story in height or extend over several stories. They reflect the large loggias or arcading built in Italy during the Renaissance and are often essential features of the Renaissance Revival style of the early 20th century. Arcaded blocks were often used for banks, large retail stores, post offices and theaters.

The Orpheum (Capitol) Theatre was built in 1913 and reflects the arcaded block building type and Renaissance Revival architectural style. The building displays polychrome terra cotta on the main façade and has been restored into a multi-use theater building.

BUILDING TYPES

Vault

Vault building types are generally two- to three-stories in height and have central openings flanked by smaller end bays. These types of buildings are similar to enframed wall designs but are distinguished by the size and scale of the central opening. These buildings often display classical elements such as columns or pilasters. This design was popular for banks, movie theaters and particularly ornate retail stores.

Built in 1916, the Tracy Loan Trust Company was constructed at 151 S Main Street. This vault design features a large central bay with a pedimented entrance flanked by Ionic columns. In addition to the entrance, the central bay is composed of a large window wall.

BUILDING TYPES

Central Block With Wings

The central block with wings is characterized by a projecting central bay with flanking wings. These buildings are generally two- to four-stories in height and often the projecting bay has a pediment and classical features such as columns and pilasters. Its origins are based on Greek and Roman temples and this design was popular for residences, public buildings and financial institutions in the early 20th century.

The Salt Lake Stock and Mining Exchange at 39 Exchange Place was built in 1908 and it retains much of its original design. The building's form is central block with wings while its architectural style is Neo-classical. The projecting central bay displays Ionic columns and a large pediment with modillion blocks.

BUILDING TYPES

Enframed Block

The enframed block is generally two- to three-stories in height with most of the façade divided into bays by classical columns or pilasters. There is usually a continuous central bay section flanked by narrow bays at each end. The end bays often display windows or other openings. This design was popular for public buildings, banks and other financial institutions.

The Federal Building and Post Office at 350 S Main Street was completed in 1906 and is an example of an enframed block designed in the Neo-classical style. The building is distinguished by its long row of engaged Doric columns on each elevation.

BUILDING TYPES

Temple Front

Temple Front buildings are derived from the designs of classical Greece or Rome and feature classical columns, pilasters and pedimented entrances. They are generally of one continuous design or composition across the width of the façade. They are usually two- to three-stories in height. The solidity and formal appearance of these buildings were often the home of banks and other financial institutions.

The building at 102 S Main Street was originally the Eagle Emporium and was built in the mid-19th century. In 1916, the building was remodeled for its occupant, the Zion's First National Bank. The façade features central Corinthian columns flanking a pedimented entrance.

BUILDING TYPES

Neighborhood Shopping Commercial Centers, 1890-1960

As residential areas developed outside the downtown area, small individual businesses often clustered together on major streets to serve the residents of the neighborhood. The businesses were often small markets or groceries, drug stores or dry goods stores, and sometimes restaurants, dry cleaning, or other services. These building were typically one– or two-stories and housed a single business, and commonly owner-occupied. The buildings were sometimes built in a row or had houses built in between. Built and owned by small business owners, the buildings generally were simple vernacular designs and did not display the high style architecture of downtown commercial buildings.

Characteristics

- one– to two-stories in height
- simple architectural design
- traditional storefront on first story
- linear clusters along the street

The building at 422-426 N 300 West Street is a good example of a neighborhood shopping commercial building.

Neighborhood shopping center commercial buildings continued to be constructed into the 1940s in many residential areas of the City (442 N 300 West).

BUILDING TYPES

Neighborhood Corner Commercial, 1890-1960

Often neighborhood commercial buildings were located on corners at primary cross streets within neighborhoods. These locations gave a business good visibility to potential customers and offered easy access. Corner commercial buildings were often two-stories in height and featured a recessed corner entrance. In many cases the first floor business owners resided in rooms on the second floor. Neighborhood commercial buildings were also constructed in the middle of blocks but corner locations were preferred.

Characteristics

- location on corner lot or mid-block
- recessed corner entrance
- simple design

Corner entrances and corner lot locations gave neighborhood commercial buildings such as this one at 740 E 2nd Avenue easy access to customers.

BUILDING TYPES

House Stores, 1890-1940

House stores are found throughout America but are relatively rare in most communities. Salt Lake City is distinctive in having numerous examples within the Avenues, University and Capitol Hill Historic Districts. This commercial building form combines commercial and residential structures in one location, but with distinct separate architectural units. The form is characterized by a one– or two-story commercial structure attached to a one-story residential structure on a side elevation. The commercial unit typically is the dominant structure and features a traditional commercial storefront. The residential unit is commonly set back from the façade of the commercial unit and features a more domestic, yet compatible, architectural design. This type of building form allowed business owners to maintain businesses on their own property and closely combine their work and living space, yet maintain distinctly separate spaces for each.

House stores can be found in a variety of styles and forms throughout Salt Lake City.

This building features an original storefront in the commercial section (82 N 'Q' Street).

Although the commercial section has been altered, it remains a good example of a house store design (537 N 200 West).

Characteristics

- one– to two-story commercial structure laterally attached to a one-story residential structure.
- traditional storefront on commercial section
- domestic architectural design of residential unit
- residential units set further back from the street than commercial unit

This house store at 228 N 'B' Street demonstrates the compatible, yet distinct commercial and residential units of this building form.

BUILDING TYPES

Office Buildings and Medical Complexes, 1950-1980

Salt Lake City's commercial district also includes mid-to-late 20th century office and medical buildings. These buildings tend to emphasize the horizontal plane with rows of full-height windows and roof over-hangs. They are generally one- or two-story at most. Windows are fixed in metal frames. These types of buildings often feature exteriors with new materials, such as tinted glass, aluminum and stainless steel, porcelain panels, and concrete panels.

Office building at 641-645 E South Temple Street.

780 E South Temple Street.

ARCHITECTURAL STYLES

Architectural Overview

Salt Lake City contains a wide range of commercial architectural styles and designs. Historic commercial buildings in the City date from the late 19th century through the mid-twentieth century and reflect the City's commercial growth. The commercial buildings in Salt Lake City follow the stylistic designs of the period. Those built from ca. 1880 to ca. 1910 generally display the influences of the Italianate and Romanesque styles. These styles placed an emphasis on rounded arched windows, decorative cornices at the roofline and extensive decorative detailing on upper façades. Romanesque-influenced buildings also often feature a variety of materials on upper façades including stone arches and terra cotta decorative panels.

By the early 20th century, commercial buildings exhibited the influence of the Colonial Revival and Neoclassical styles. Buildings with Colonial Revival characteristics were generally built with rectangular rather than arched windows and with classical detailing such as Doric and Ionic pilasters, and cornices with dentils and modillion blocks. Neoclassical designs featured a dominant entrance and large classical columns typically with Ionic or Corinthian capitals.

Advances in construction technology also led to the development of the first multi-storied buildings or "skyscrapers" during the early 20th century. Many of these reflected the Chicago School style, also known as Sullivanesque after architect Louis Sullivan who popularized the modern design. These tall buildings emphasized their verticality through rows of windows within a steel frame grid pattern topped with a bold cornice.

ARCHITECTURAL STYLES

In the 1920s and 1930s commercial buildings generally became more restrained in their use of detailing and many buildings were designed with simple inset concrete or brick panels on the upper façade. An increased emphasis on commercial marketing in the 1930s and 1940s led to the remodeling of storefronts with new materials such as tinted glass known as Carrara glass, copper and glass display windows, and recessed entrances with terrazzo floors. Since World War II, some of Salt Lake City's commercial buildings have been remodeled with new storefronts and some upper facades have been concealed beneath false fronts. In some cases, changes to buildings that were made over fifty years ago can be architecturally or historically important, and in such cases are to be retained when the building is rehabilitated. Typical changes include the addition of Carrara glass in storefronts and terrazzo floor entrances, which gave the buildings a more modern appearance.

As Salt Lake City grew and its residential areas expanded, many neighborhoods supported local commercial businesses that were housed in one– or two-story buildings on primary streets within residential areas. Often these neighborhood commercial buildings were located on prominent corners for high profile and easy access. Another common commercial form that developed in Salt Lake City was the house store. This combination of residential and commercial building typically consists of a one– or two-story commercial building with a traditional storefront attached to a one– to one– and one-half story residential structure. This combined building form allowed small business owners to live and work in the same connected space.

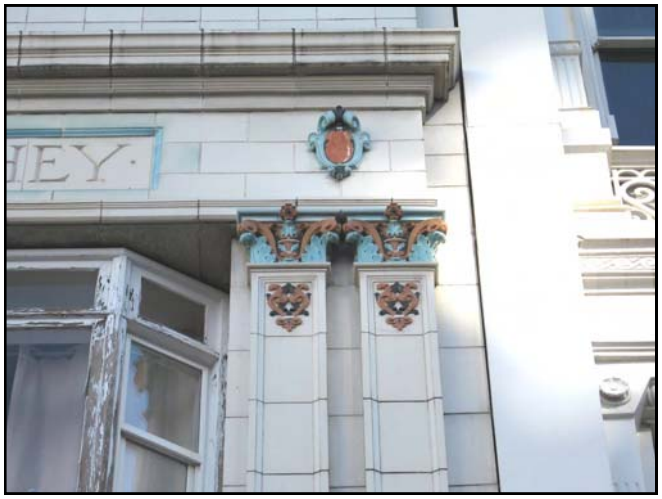

Downtown contains buildings with notable detailing such as the terra cotta façade at 159 S Main Street.

ARCHITECTURAL STYLES

Romanesque, 1880-1900

This late 19th century architectural style was very popular for commercial buildings and many of downtown Salt Lake City's buildings from the turn of the century reflect this style. The style was adopted for many public buildings as well as residential and commercial forms. The style employs a variety of masonry, rounded arches, and emphasizes sculpted shapes. Romanesque buildings with massive stone arches and façades are known as Richardsonian Romanesque, named for architect Henry H. Richardson who designed in this style and was influential in the late 19th century.

A combination of brick and decorative stone are featured on the upper façade of Daft Block, 128 S Main Street.

Characteristics

- masonry walls, often of two or more colors, types or textures to create decorative wall patterns
- rough-faced, squared stonework
- asymmetrical facades
- wide, round-topped arches featured over windows or entry-ways
- deeply recessed windows, usually with one-over-one sashes
- floral or other decorative details on wall surfaces and column capitals

Rounded arches and textured masonry are common features of the Richardsonian Romanesque style.

Utah Commercial and Savings Bank, 22 E 100 South.

ARCHITECTURAL STYLES

Colonial Revival, 1900-1955

The Colonial Revival style recalls the symmetrical and unadorned architecture of the nation's colonial period. A widely dominant style in American residential architecture throughout the first half of the 19th century, Colonial Revival designs were also prominent in commercial architecture. The style emphasizes symmetry and balance and employs classical detailing such as dentil molding. Pilasters are often utilized to divide storefronts into a balanced façade, and decorative embellishments, if present, are minimal.

Characteristics

- symmetrical façade
- rectangular sash windows
- simple, unadorned cornice

Pilasters divide the upper façade at 222 W 300 South and present a balanced and symmetrical appearance.

ARCHITECTURAL STYLES

Neoclassical, 1895-1950

Renewed interest in earlier Classical Revival and Greek Revival architectural styles led to the development of the Neoclassical style of the early 20th century. This interest was spurred by the architecture of the 1893 World's Columbian Exposition held in Chicago. The exposition promoted a classical theme and many of the country's leading architects designed large columned buildings which were placed around a central court. The exposition was a huge success, heavily attended and widely photographed and reported on across the country, thus making the Neoclassical style a fashionable trend. The large scale of the exposition's central building inspired numerous public and commercial buildings of similar designs across the country during the following decades.

Characteristics

- large columns, typically with Ionic or Corinthian capitals
- elaborate entrance, often with a pediment
- rectangular, double-hung sash windows

The Salt Lake Stock and Mining Exchange at 39 Exchange Place (left) and 151 S Main Street (right) demonstrate the Neoclassical style with prominent classical columns and accentuated entrances.

ARCHITECTURAL STYLES

Sullivanesque, 1885-1920

Tall commercial buildings, those over six stories in height, became possible in the late 1880s after advances in construction technology such as the use of iron and steel skeleton frames, wind bracing, elevators, and improved foundation technology became available. This new technology was initiated by Chicago architects in the late 19th century, and the tall commercial buildings that they produced became known as the Chicago School style. These large buildings were rectangular in form with a flat roof and a simple cornice. Because the exterior walls of the skeleton frame did not have to bear tremendous weights, they could have large areas of glass, terra cotta, or other non-supportive materials.

The Kearns Building at 136 S Main Street is representative of the Sullivanesque style.

The Chicago architect best associated with the style was Louis Sullivan. His distinct designs divided the tall buildings into three divisions similar to a classical column: a base consisting of the lower two stories; a main shaft that emphasized the verticality of the building via piers between windows; and an elaborate projecting cornice, often of terra cotta. Ornamental details often included foliate designs at the entrance and window divisions.

Characteristics

- multiple stories
- windows fill a large portion of wall space
- elaborate decorative cornice
- decorative embellishments at entrance
- piers between windows

Rows of windows separated by decorative spandrels reflect the Sullivanesque style in the McIntyre Building at 68-72 S Main Street.

ARCHITECTURAL STYLES

Modernistic, 1930-1960

Modernistic styles such as Art Moderne and Art Deco developed in the early- to mid-20th century and modeled the streamlined industrial designs of airplanes and automobiles. They feature smooth surfaces, curved corners, and horizontal emphasis to present a streamlined quality. The Art Deco style placed more emphasis on angularity and stylized floral and geometric designs. Neither the Art Moderne or Art Deco styles were utilized widely in Salt Lake City for commercial buildings.

Characteristics

- smooth wall surfaces
- curved walls
- limited ornamentation
- glass block windows
- horizontal emphasis
- storefronts of aluminum, stainless steel, Cararra glass

The McKay Jewelry Company at 157 S Main Street occupies a building completed ca. 1950 and features a restrained upper façade and original aluminum and glass storefront.

ARCHITECTURAL STYLES

International, 1950-1970

The International style was introduced for Salt Lake City's commercial buildings in the 1950s. This style originated in Europe before World War II and soon became the design of choice for high rise buildings in America. The style emphasized simplicity of design, steel frames with curtain walls of glass, concrete and metal and rectilinear forms. Buildings could be designed with both interior and exterior columns to maximize usable floor space. The first International style high rise commercial building constructed in the City was the First Security Bank completed in 1955.

Characteristics

- rectangular forms
- glass, concrete, stone veneer and metal curtain walls

The First Security Bank Building at 405 S Main Street was built in 1955 and features an exterior curtain wall of glass, aluminum, and enameled porcelain panels.

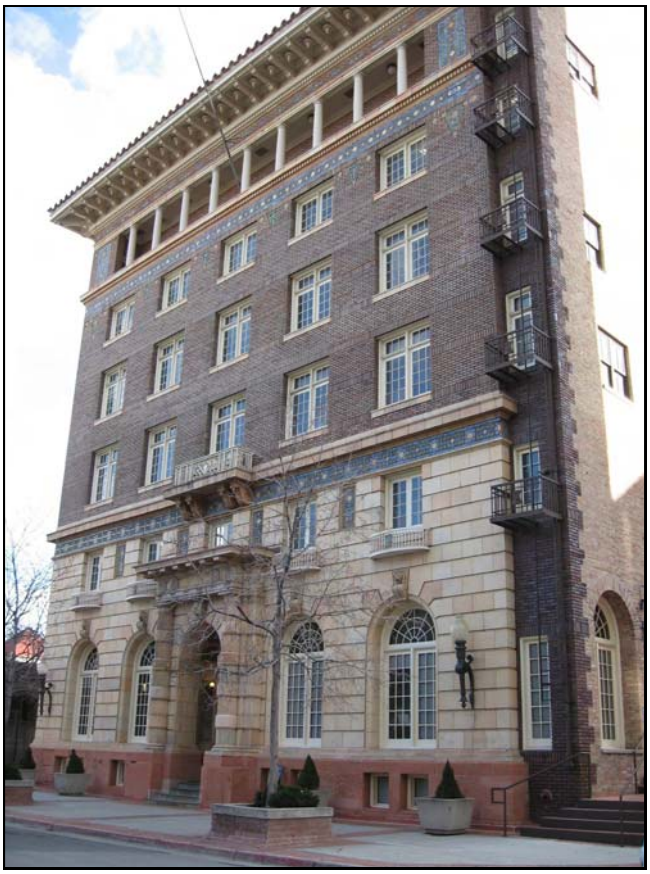

REHABILITATION GUIDELINES FOR HISTORIC COMMERCIAL PROPERTIES AND DISTRICTS

1.0. SITE FEATURES

Policy

Preserve and retain historic site features of commercial buildings, including landscaping. In downtown Salt Lake City few historic site features remain extant. In residential areas, preserve site features on buildings such as neighborhood commercial buildings and house stores in accordance with the City's *Design Guidelines for Residential Historic Districts in Salt Lake City*. Ensure that new site and landscape features are compatible with the historic context of the building and area.

Many blocks downtown have added light guidelines based on traditional designs.

Background

In its early years, downtown Salt Lake City originally had streets and sidewalks of dirt which were both dusty and muddy depending on the weather. As the City grew, sidewalks of wood planks were added and these in turn were replaced by brick and concrete sidewalks in the late 19th and early 20th centuries. Street trees were planted along a number of blocks to provide shade for pedestrians. Most commercial buildings were constructed directly adjacent to the public sidewalk resulting in little need for retaining walls or similar features. Improvements to downtown after World War II included a number of initiatives for streetscape projects such as the addition of new street trees and planters and rebuilding of concrete and brick sidewalks.

Few historic features are extant downtown and those that remain are primarily sections of mid-20th century concrete sidewalks. However, there have been efforts in recent decades to recapture the historic ambiance of downtown using traditional light guidelines and replanting street trees on many blocks. Continue to reinforce this appearance in future public improvements along blocks containing historic buildings.

1.0. SITE FEATURES

Many downtown blocks display added street trees, traditional lighting and varying sidewalk paving materials.

Added planter box and street trees in the 200 block of Main Street.

1.0. SITE FEATURES

Commercial buildings in Salt Lake City's historic residential areas were designed to be as open, inviting, and as accessible as possible. As a result there are few instances of historic fence materials or retaining walls in front of these buildings. However, many were built or were later enhanced with broad concrete sidewalks or concrete extending the width of the storefront. This allowed potential customers to avoid dirt and mud and provided a more pleasing shopping experience. Many of the neighborhood commercial and corner commercial buildings in areas such as Capitol Hill and the Avenues retain their early- to mid-20th century concrete walkways.

Storeowners also added landscape features at the fronts of their buildings, such as planter boxes, and in the park strips between the sidewalk and street. While most historic plant materials have been replaced over time, the use of appropriate plants as well as traditional planting patterns should be utilized when planning new landscape treatments for historic commercial buildings.

The South Temple Historic District is particularly notable for its long line of mature street trees. These trees add greatly to the character of the district and are an important historic element of the street. This district also contains a large number of commercial buildings from the 1940s and 1950s that were designed with landscaped front yards and concrete walkways. Several also have low masonry retaining walls adjacent to the sidewalk.

The South Temple Historic District is notable for its large older shade trees. Preserve streetscape in future public and private improvements.

1.0. SITE FEATURES

1.1 Preserve historically significant site features. Preserve and maintain original site features such as fences and retaining walls in front of commercial buildings. Repair masonry retaining walls using proper mortar mixes and compatible materials. Follow site feature repair and retention guidelines set forth in the City's *Design Guidelines for Residential Historic Districts.*

1.2 Maintain street trees, landscaping, and hardscape features. Maintain street trees, sidewalks, walkways and planting strips for any private or public projects. In the hot, dry climate of western states, Xeriscaping, planting hardy native botanicals, has become a popular and responsible philosophy of landscaping. Selecting indigenous plants reduces water use, as these species tolerate drought. Their use also minimizes maintenance.

1.3 Respect and preserve original grading designs in front of commercial buildings.

1.4 Install site lighting that is compatible with adjacent historic buildings. In residential areas this would include shielded exterior lights and footlights along walkways.

Preserve and maintain masonry retaining walls in front of commercial buildings such as this example at 445 E South Temple Street.

2.0 STOREFRONTS

Policy

Storefronts are especially important elements of commercial buildings that define the historic character and appearance of the building. Retain, maintain and repair historic storefronts and their components. Do not cover or conceal historic storefronts.

Preserve and maintain original storefronts, such as those at 802 S 600 East (top) and 779 S 500 East (bottom).

Background

Traditionally, storefronts comprise the first story of a commercial building's primary façade and are visually separated from the upper floors of the building through design and architectural details. Common components of storefronts include awnings, display windows, bulkheads, pilasters, entrances, beltcourses and cornices. Large display windows allowed proprietors to showcase their merchandise and entice prospective customers into their stores. Many storefronts of the late 19th and early to mid-20th centuries featured recessed entrances, which simultaneously helped to extend the display area and draw pedestrians inward.

Some 19th and early to mid-20th century buildings have storefronts that were remodeled at a later time period. Storefronts from the 1920s to the 1940s reflect an important movement in merchandising and sales of the period and also are highly decorative in their designs. Materials such as marble, tile, and tinted glass, commonly known as "Carrara" glass, were all used to update storefronts during these decades. Preserve and maintain these storefronts. Commercial buildings constructed in the 1950s and 1960s may also possess storefronts with significant materials and detailing. Preserve these storefronts in future rehabilitation efforts. Storefronts on older buildings which were remodeled within the past fifty years are often not compatible with overall building character and their removal may be appropriate when rehabilitation is undertaken. Replace such storefronts with designs based on the original appearance of the storefront, if known.

A Carrara glass storefront at 432-434 E South Temple Street.

2.0 STOREFRONTS

Awnings

Historically, shopkeepers commonly used awnings on their storefronts. Not only did they provide shelter for shoppers, but they also helped in heating and cooling the building. Canvas fabric was most common for awnings prior to the 1940s, when metal awnings became prevalent. Also, as air conditioning became more common after the 1940s, awning use declined.

Historic awnings contribute to the character and appearance of storefronts. Preserve and maintain any original awnings.

An example of a metal awning on the New Grand Hotel at 369-379 S Main Street.

Display Windows and Bulkheads

Traditional storefronts of the late 19th and early to mid-20th centuries featured large plate glass windows at the street level of the facades to display their wares to passersby. Bulkheads are the lower panels on which the display windows rest and are often of wood or brick.

Preserve, maintain and if needed repair original display windows. and original bulkheads where they exist. Do not alter or remove original bulkhead panels.

Original wood bulkheads such as those at 361 N Main Street (left) and 779 S 500 East (right) are significant parts of historic storefronts.

2.0 STOREFRONTS

Doors and Entrances

As points of entry, doors and entrances are important visual elements of commercial buildings. Common door designs for commercial properties of the late 19th and early to mid-20th centuries are single-light wood forms that vary from simple flush or paneled designs to those with elaborate decorative detail. Double doors were common, and many entrances also featured transoms of decorative degrees. Because they are a key focal point of commercial properties, major alterations to entrances or replacement with inappropriate doors can severely affect the character of a historic building. Therefore, preservation and retention of original doors and entrances is extremely important. Preserve original doors unless clearly proven to be deteriorated beyond repair. Replace missing or severely deteriorated doors with historically appropriate doors.

For more information on doors and entrances, refer to *Design Guidelines for Residential Historic Districts in Salt Lake City,* page 79. For information on complying with the American Disability Act, see page 94 of this document.

Wood doors on Utah Commercial & Savings Bank Building at 22 E 100 South.

Staircases and Steps

Because of changes in grade along Salt Lake City's streets, not all commercial entrances are at street level and some commercial buildings have exterior steps or staircases as part of their original design. If this is the case, preserve and maintain such original elements. Do not add exterior staircases or steps to buildings where none historically existed. Retain original steps and stairs accessing entrances and repair with materials to match the original. If original steps are beyond repair, match replacement stairs to the originals.

Lighting

Original light fixtures are details that contribute to a building's unique historic character by helping to portray a sense of time and place. If any historic light fixtures remain, retain them.

2.0 STOREFRONTS

Storefronts

It may be necessary to consult with a historic architect, architectural conservator, or experienced contractor to determine the appropriate treatment.

2.1 Retain and maintain historic storefronts and their components. Storefronts are often the most visible feature of historic commercial buildings. Maintain storefront components, including display windows, bulkheads, transoms, doors, cornices, pillars and pilasters, with proper care and treatment. Do not cover or conceal these historic storefront components with modern materials.

2.2 Repair deteriorated or damaged storefronts or components so that the storefront retains its historic appearance. If historic storefronts or their components are missing, replace them so that they replicate the historic storefront. Match replacement components to the original in size, material, texture, and detail. Use historical photographic evidence to help determine the design and

Good examples of rebuilt storefronts are those at 68 N 'K' Street (above) and 740 E 2nd Avenue (right).

2.0 STOREFRONTS

Awnings

2.3 Select awnings of traditional design.
Shed awnings are most appropriate for commercial buildings in Salt Lake City. Arched awnings are appropriate for arched openings. Flat, metal awnings are appropriate on mid-20th century storefronts. The use of bubble, concave, or convex forms is discouraged except where used originally. Internally lit awnings and vinyl awnings are inappropriate. Awnings may be retractable or fixed in place. Select awning colors that are compatible with and complementary to the building. Avoid harsh or overly bright colors.

2.4 Place awnings so that they do not cover or detract from architectural details and elements.
If pilasters or columns define the storefront, place awnings within these spaces rather than overlap the entire storefront. Upper façade windows are also appropriate locations for awnings. Transom lights of prism glass or stained glass are important visible features of a building; do not cover such feature with awnings.

2.5 Select awnings of traditional materials such as canvas and metal.

2.6 Do not place solar panels on awnings.

Awnings are appropriate for commercial buildings: 501 E 300 South (left) and 736 N 300 West (right).

2.0 STOREFRONTS

Display Windows and Bulkheads

2.7 Preserve and maintain original display windows and bulkheads. Display windows and bulkheads are essential elements of traditional storefronts and contribute significantly to a commercial property's historic character and appearance. If at all possible, it is better to repair rather than replace original features.

An example of an original tile bulkhead at 422-426 N 300 West.

2.8 Select replacement display windows and bulkheads that match the originals in location, design, size, and materials. If original display windows or bulkheads are missing or deteriorated beyond repair, they may be replaced with new ones to match the original. If the original is unknown, select replacement windows that are traditionally scaled with large glass lights and with as few structural divisions as possible to maintain the traditional transparent storefront look. If the original bulkhead material is unknown, replacement may be of wood, brick, metal, or other material that is appropriate with the façade.

An original display window at 82 N 'Q' Street.

2.9 Install proper framing and glass when repairing or replacing display windows. Match window mullions or framing to the original; wood, copper, bronze metal, steel, or aluminum window mullions or framing is appropriate. Tinted glass on a storefront is only appropriate if it was used historically. Interior shades or blinds can be utilized for privacy.

This rebuilt bulkhead at 361 N Center Street is a good example of in kind replacement.

2.0 STOREFRONTS

Doors and Entrances

2.10 Preserve and maintain original doors and entrances. Do not remove or alter original doors, surrounds, transoms, sidelights, unless proved to be deteriorated beyond repair. Retain and maintain original framing such as jambs, sills, and headers of openings. Preserve primary doors, or those on the main façade, as they are especially important to a building's historic appearance. Do not fill or partially block historic door openings.

2.11 Keep repairs to deteriorated or damaged historic doors consistent with historic materials. When repairing historic doors, use methods to retain their historic fabric and appearance as much as possible. Epoxy is helpful in strengthening and replacing deteriorated wood.

2.12 Replace historic doors that are beyond repair or missing with new doors that replicate the originals. Match replacement doors to the historic door in materials and size; ensure they are consistent for the style and period of the building. Ideally, the replacement doors will have the same series of panels and have a frame of the same dimensions. Refer to documented research and/ or historic photographs when replacing doors. Neighboring buildings of the same style and similar date of construction may provide guidance for identifying appropriate doors. In replacing missing original doors, select replacement doors that are similar in design to the original in style, materials, glazing (glass area) and lights (pane configuration).



Salt Lake City's commercial buildings have a variety of doors and entrances: Original double doors at 361 N Main Street (left) and 740 E 2nd Avenue (center), and an original steel door at 736 N 300 West (right).

2.0 STOREFRONTS

2.13 Do not install new door openings where none existed. Installing new door openings is not recommended. Ensure that new openings, when permitted, are compatible in scale, size, proportion, placement, and style to historic openings. Locate new openings on side or rear elevations rather than the main façade.

Staircases and Steps

2.14 Retain original staircases and steps. Staircases and steps that are original to a building are another historic component of the building and add to its historic identity.

2.15 Make repairs with in kind materials. Repair wood and concrete stairs with materials to match the original. If tile was historically used, its use in repair work is appropriate.

2.16 The addition of handrails is allowed. Historic stairs or steps that never had handrails may have wood or metal handrails added if they are compatible with the style and design of the building. New or replacement stairs or steps can be designed to include handrails that are simple in design and no larger than 1-1/2" in diameter. These handrails can be attached to existing historic staircases when required to meet codes.

Rebuilt doors, such as this example at 428 W 300 South, replicate the original as closely as possible.

2.0 STOREFRONTS

Lighting

2.17 Maintain historic light fixtures. Historic light fixtures add to the historic character of a building; preserve them if possible. Repair deteriorated or damaged historic light fixtures using methods that allow them to retain their historic appearance.

2.18 Repair or replace missing or severely damaged historic light fixtures with replacements that replicate the originals. Original light fixture design may be documented through photographic or physical evidence. If no such evidence exists, a design that is compatible with the remaining character-defining feature's of the historic building is appropriate. Use of modern, low-wattage bulbs are recommended.

2.19 Keep fixtures introduced to the exterior simple in design and appropriate to the character of the building. If modern light fixtures are desired as replacements or where light fixtures previously did not exist, ensure that they are unobtrusive, conceal the light source, and direct light toward the building.

2.20 Do not allow light fixtures to damage or obscure architectural features or other building elements. When securing light fixtures, make sure they do not damage masonry, siding, or other historic materials. Position lights in a manner that enhances visibility without detracting from the building's historic character.

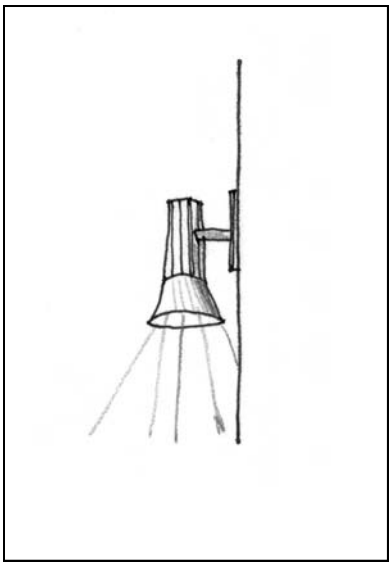

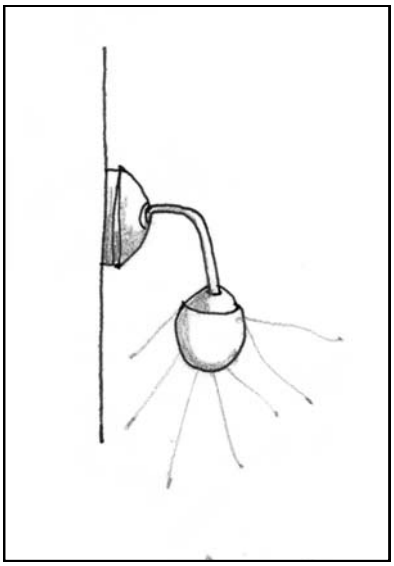

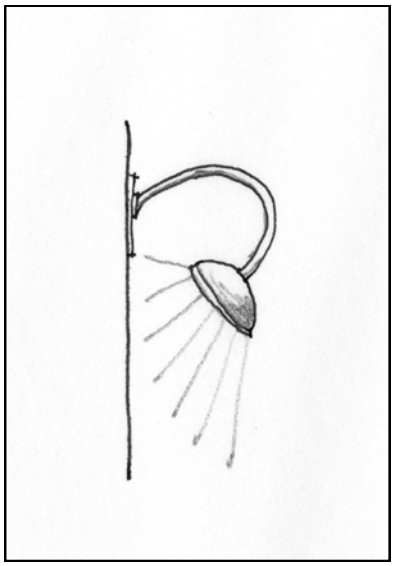

2.0 STOREFRONTS

Good lighting choices for historic buildings are simple and unobtrusive, such as the example shown above at 361 N Main Street.

Swan– or goose-neck fixtures in dark metals are appropriate new light fixtures for commercial buildings, as at 82 N 'Q' Street (left) and 422-426 N 300 West (right).

3.0 PRIMARY MATERIALS

Policy

Preserve primary historic building materials, such as brick, wood siding, stone, or metal whenever possible. If historic materials are damaged, limited replacement with material matching the original may be considered. Proper maintenance of historic primary materials is important; avoid harsh or abrasive cleaning treatments. Do not cover or conceal historic primary materials.

Historic masonry adds distinct character to buildings; preserve and maintain it with proper care (328 S Main Street).

Background

Wood siding and brick were the dominate primary building materials in Salt Lake City in the 19th and early 20th centuries. Stone and adobe were used as well, but adobe was typically covered with wood siding. The distinct qualities of primary building materials, including their texture and finish as well as size and scale, help to determine the overall historic character of a building.

In the mid-20th century a number of new materials were introduced for use on commercial building facades. These include tinted glass, also known as "Carrara Glass" which was a popular material for storefronts in the 1930s and 1940s. Other storefront materials included the use of aluminum and stainless steel for display window surrounds. During the 1950s, the use of thin veneers for exterior sheathing became popular and these materials included marble, stone, and concrete. The use of porcelain panels was also introduced during these years. Concrete panels and glass curtain walls were used for Salt Lake City's high rise commercial buildings in the 1950s and 1960s.

Proper maintenance of primary materials is key to their preservation. Paint wood surfaces, and keep masonry dry. When deterioration occurs, repair primary materials. In cases where materials are beyond repair, replacement with material matching the original is recommended. Keep replacement of original materials as minimal as possible in order to maintain as much primary building material as possible.

For more information about paint and paint color, please refer to *Design Guidelines for Residential Historic Districts in Salt Lake City*, page 133.

3.0 PRIMARY MATERIALS

Brickwork and Masonry

Brick and stone have been typical primary building materials in Salt Lake City since its founding. The unique scale, texture, and finish of the brick or stone used in a given building contributes to its distinct appearance and historic character. When repairing historic masonry, it is important to match the original materials as closely as possible. The color, texture, and joint profile of the historic mortar are also important characteristics.

Preserve and maintain original wood siding (801 E 1st Avenue).

Hard impermeable modern mortars may force moisture through the more permeable brick and force mechanical stresses to be relieved through the softer brick...which may lead to cracking, spalling, and erosion.

If properly maintained, masonry can last indefinitely. The keys to brick and mortar preservation are to keep water out and to apply the correct type of mortar when repairs are needed. Soft mortars are most appropriate for buildings constructed prior to the mid-20th century. More modern buildings may have harder mortars; undertake repairs using mortars similar to those used in their construction.

For more information about brickwork and masonry, please refer to *Design Guidelines for Residential Districts in Salt Lake City,* page 61.

Siding

Wood siding is not as common on commercial buildings as masonry, but in instances where it is the original exterior material, siding plays a key role in the historic appearance of a building.

3.0 PRIMARY MATERIALS

Covering original siding with new materials is not recommended. Not only do new materials such as vinyl and aluminum poorly replicate the appearance and texture of wood siding, these materials can also cause damage to historic buildings. Synthetic sidings may not allow the historic building to "breathe" and provide sufficient permeability. These types of siding can trap moisture and condensation in the wood underneath, leading to rot and structural problems. Removal of synthetic siding and the rehabilitation of original wood siding is highly encouraged.

Cast iron details add to the historic character of a building (68 N 'K' Street).

Cast Iron and Metal

Many of Salt Lake City's historic commercial buildings display decorative cast iron and other metals including copper, tin, and steel. Exterior metals may have both structural and decorative uses and are found in cornices, window hoods, capitals, columns, lintels, sills, and other elements. Preserve and maintain metal features or replicate with new metal to match the original. Clean metals with the gentlest means possible.

Paint

Paint colors are not reviewed by the City. However, property owners are encouraged to use colors consistent with the building's architectural style and period. Salt Lake City commercial buildings appear in a wide variety of color schemes. Paint color does not impact the form of a building, but it can affect the perception of the building and help it harmonize with the surrounding streetscape. Select color schemes that are compatible with surrounding structures to create a sense of visual continuity along the block and that reflect the historic style and period of the building.

Generally, avoid removal of exterior paint from historic buildings unless absolutely necessary. Conditions such as mildewing, excessive chalking, or staining may warrant paint removal. In such cases paint can be removed to the next sound layer using the gentlest means possible. If continuous patterns of deep cracks occur in paint or if extensive blistering and peeling occur, remove the old paint completely before repainting. If woodwork is stripped to bare wood, prime the surface within 48 hours (or as soon as wood is dry if it is wet).

3.0 PRIMARY MATERIALS

Brickwork and Masonry

3.1 Preserve and maintain original brick, stone, terra cotta, cast concrete, mortar, and other masonry original to a building. Masonry is a character-defining element of historic buildings. Different textures, finishes, and patterns contribute to a building's distinct appearance. Preserve masonry in place to retain the building's historic character. Do not cover or conceal original masonry surfaces with non-historic materials such as stucco, metal, adobe or vinyl.

Leave historic brick unpainted (271 N Center Street).

3.2 When cleaning masonry, use the gentlest means possible. Clean historic masonry only when necessary to halt deterioration or to remove graffiti and stains. Avoid any kind of harsh, abrasive cleaning such as sandblasting. The use of detergent cleansers to remove dirt or grime from masonry is acceptable. Water and a mild detergent using natural bristle brushes, and/or a non-harmful chemical solution, both followed by a low-pressure water rinse is recommended. When cleaning brick, it is advisable to test a small area first to ensure the procedure and cleaning agent are compatible with the masonry. Do not clean or remove paint from masonry with high pressure water.

3.3 Keep historic masonry visible and unpainted. Do not paint masonry that has never been painted. If water is penetrating historic masonry, water-repellent coatings can be used. The use of silicone-based sealants on masonry walls is not recommended. Silicone-based sealants do not allow the brick to "breathe" and can trap moisture within walls. Also, there are very good non-paint related treatments that are highly effective in strengthening damaged sandblasted masonry and rendering it more water repellant and resistant to the elements.

It may be necessary to consult with a historic architect, architectural conservator, or experienced contractor to determine the appropriate treatment.

3.4 Avoid the use of power tools on historic masonry. Power tools are damaging and are not appropriate when removing mortar. Hand tools are preferred since they allow for precision work and minimal damage to adjacent brick and stone.

3.5 Preserve original mortar when feasible, but if repointing is necessary use mortar mixes similar to the original. Soft mortar with a high ratio of lime was traditionally used in masonry buildings constructed prior to the 1930s. Relatively low

3.0 PRIMARY MATERIALS

proportions of Portland cement were used if any. Harder mortars appear in more modern buildings. Match new mortar to the original mortar in width, depth, color, joint profile, and texture. When repointing historic mortar, it is important to use a mix that is softer and more permeable than the masonry units to ensure the preservation of the historic masonry.

Impermeable modern mortar can be inappropriate for repointing older brick and stone because they may force moisture to pass through the more permeable masonry rather than the mortar. Mechanical stresses cause expansion, contraction, settlement, and water-driven deterioration mechanisms like freeze-thaw will also be relieved in the masonry rather than the mortar if the latter is harder than the former. Modern mortars may also contain harmful soluble salts that further accelerate brick and stone deterioration.

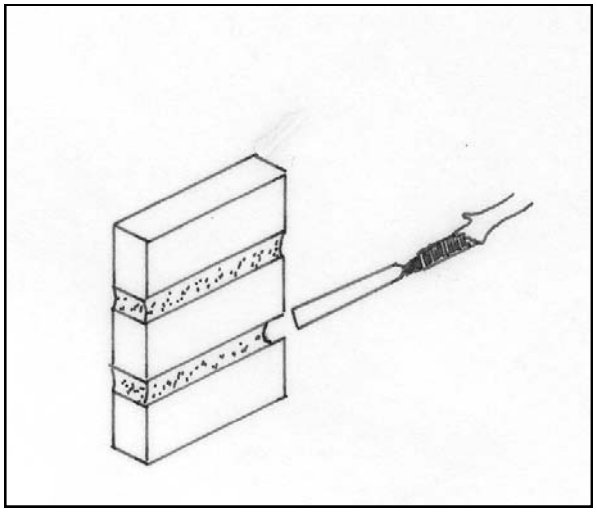

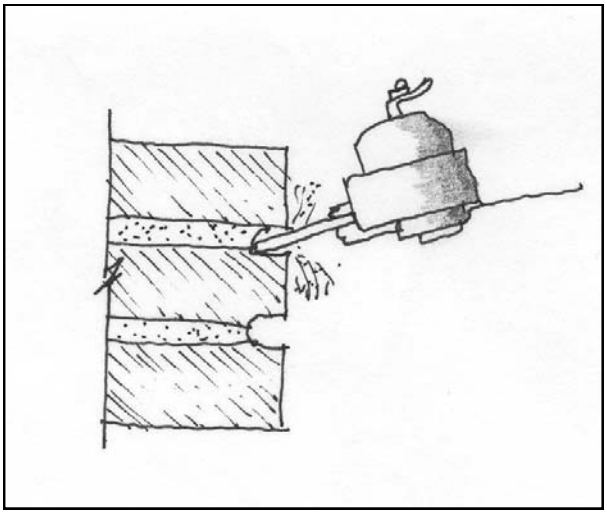

Hand tools (right) are preferred when removing mortar. Avoid power tools (left) which can damage historic masonry. It may be necessary to consult with a historic architect, architectural conservator, or experienced contractor to determine the appropriate treatment.

3.0 PRIMARY MATERIALS

Siding

3.6 Preserve and maintain original siding. Original siding material is a significant part of the fabric of a structure. It provides scale, texture, and shape, which help to define and characterize an architectural style. Loss of original siding can change the identity of a building in an adverse manner.

3.7 Repair original siding when necessary, and replace only if it is proven to be deteriorated beyond repair. Regular maintenance of siding will ensure its longevity. Apply paint of an opaque stain to wood siding to provide a finished surface. (Paint color is not reviewed.) If replacement of siding is necessary due to deterioration, match new siding to the original in size, placement, and design.

Original wood siding, 271 N Center Street.

3.8 Synthetic or substitute materials such as vinyl, aluminum, and asbestos are not compatible materials to historic buildings built prior to about 1950, and are not allowed as replacement materials on these earlier historic buildings. Synthetic sidings do not adequately replicate siding of traditional materials and greatly detract from a building's historic appearance. Replacement of traditional materials such as wood or brick with synthetic materials is not allowed. However, these types of materials might be suitable for buildings constructed in more recent decades if the materials were used originally.

3.9 Clean siding with the gentlest means possible. Destructive, dangerous, and/or abrasive cleaning techniques, such as propane torching and sand– or water-blasting, are not allowed.

3.0 PRIMARY MATERIALS

Cast Iron and Metal

3.10 Preserve and maintain cast iron and metal original to a building. Metal elements are often important in defining a building's historic character and significance. Properly care for original metal features, and do not cover, remove or obscure them.

3.11 Clean metal elements with the gentlest means possible and keep free of rust. Clean soft metals such as bronze, lead, tin, and copper with appropriate chemical methods because their finish can easily be damaged with abrasive methods; use the gentlest cleaning methods for cast iron, wrought iron and steel metals to remove paint buildup and corrosion. If hand-scraping and wire brushing have proven ineffective, low pressure dry grit blasting (less than 100 pounds per square inch) may be appropriate as long as it does not damage the surface.

3.12 Repair metal features by patching, splicing, or otherwise reinforcing the metal using recommended preservation methods. For extensively deteriorated or missing parts, repair may also include limited replacement in kind or with compatible substitute materials, when there are surviving examples or sufficient documentation for an accurate reconstruction of the original. Replicate missing elements with new metal to match the original as closely as possible in texture, profile, and appearance. In some situations, substitute materials such as aluminum, wood, plastics, and fiberglass, painted to match the metal, can be used. Check to be sure any substitute material is compatible with the original metal and there is no danger of a galvanic reaction.

Preserve and maintain original cast iron features such as those at 68 N 'K' Street (above) and (below).

Cast iron columns on the Brooks Arcade at 268 S State Street.

3.0 PRIMARY MATERIALS

Tinted Glass, Marble and Stone Veneers, Concrete Panels, Porcelain and Aluminum

Beginning in the mid-20th century, office buildings and medical complexes became incorporated into Salt lake City's commercial district. These types of buildings introduced a number of new materials for use on commercial building façades, including tinted glass, aluminum and stainless steel for display window surrounds, porcelain panels, concrete panels, and glass curtain walls. Some of these materials are no longer manufactured and pose challenges for repair and replication. Repair is always the preferred alternative. If repair is not feasible it is recommended that materials be used to match the original as closely as possible. There is a growing industry in salvaging and selling materials from this time period and if not available locally, seek materials from companies on the internet. Guidelines for these materials are as follows:

Marble paneled veneer on the main façade at 641-645 E South Temple Street, which was built in 1957.

3.13 Preserve and maintain historic materials from the mid-20th century.

3..14 If repair is not an option, consult salvage companies or internet sources for replacement materials.

3.15 If exact replacement materials cannot be obtained, use materials that replicate the original as closely as possible in appearance, color and texture.

This stone veneer corner bay is at 633 E South Temple Street and was built in 1960.

Porcelain panels on the 1959 Felt-Buchorn Building at 445 E South Temple Street.

3.0 PRIMARY MATERIALS

Paint

3.16 Maintain a building's original historic painted or un-painted appearance. Maintain the painted surface of historically painted buildings or features. Do not paint masonry buildings that have not been previously painted.

3.17 Use non-abrasive methods to remove paint and protect historic materials during removal. To remove paint, use non-abrasive methods such as chemical cleaning, hand-scraping, or hand-sanding. Do not use abrasive or high-pressure removal methods which are destructive.

Maintain historic painted appearances (128 S Main Street).

4.0 WINDOWS

Policy

Preserve, maintain or repair original windows. Do not conceal, enclose or cover historic windows If replacements are necessary due to deterioration, match the historic window in size, and number and arrangement of panes, or lights. Ensure replacement window frames are of the same material, such as wood or metal, as original windows. Do not introduce new window openings on facades.

Background

Windows are one of the most significant architectural features and visual components of historic buildings. Window design, placement, and arrangement all help to define the historic character of a building. Windows provide scale and visual interest, and they often have unique ornamental trim, hoods, or surrounds that help to define a building's style. Because historic windows are so significant to the character of a building, their retention and treatment is very important. For more information on windows refer to *Design Guidelines for Residential Historic Districts in Salt Lake City,* page 69.

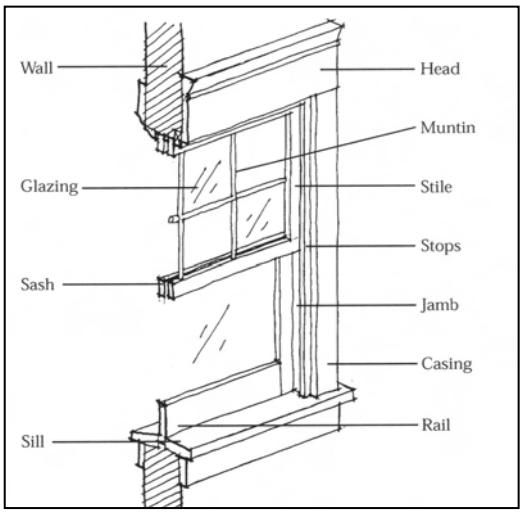

Profile of a sash window noting its different elements.

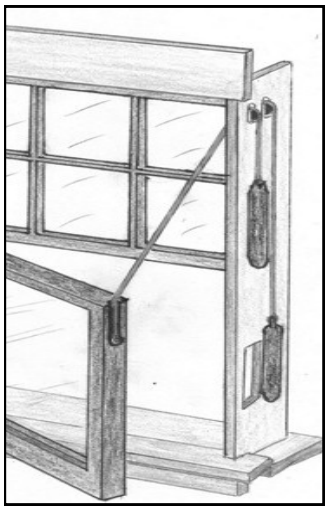

Profile of typical sash weights and cords.

4.0 WINDOWS

Why Preserving Original Windows is Recommended and Makes Economic and Environmental Sense

Nationally-accepted principles for preservation recommend the retention and careful treatment of historic wood and metal windows unless the windows are clearly proven to be deteriorated beyond repair. The reasons for preserving original windows include:

- Windows are a significant part of the original fabric of historic structures. They provide important architectural qualities that define and characterize an architectural style and time period as well as the scale of a building and/or historic district. The loss of windows alters the defining qualities of the historic fabric, structure and/or historic district. Rebuilding historic wood windows and adding storm windows makes them as efficient as new vinyl windows and more than offsets the cost of installation. A comprehensive window study in Vermont in 1996 found that a weatherstripped wood window with an added storm window was as energy efficient as most new vinyl thermo-pane windows.

- The old-growth lumber used in historic window frames can last indefinitely, unlike new-growth wood or vinyl.

- All windows expand and contract with temperature changes. However, vinyl expands more than twice as much as wood and seven times more than glass. This often results in failed seals between the frame and glass and a significant performance reduction. Vinyl windows have a high failure rate – more than one-third of all windows being replaced today are less than ten years old (Source: *Fine Homebuilding Magazine,* October/November, 2004).

- Any energy savings from replacing wood windows with aluminum or vinyl seldom justifies the costs of installation. For most buildings, it would take decades to recover the initial cost of installation, and with a life expectancy of 25 years or less, installing new vinyl or aluminum windows does not make good economic sense.

Salt Lake City buildings contain a wide variety of window designs.

228 N 'B' Street

159 S Main Street

569 E 2nd Avenue

4.0 WINDOWS

- Often vinyl windows do not look like historic wood windows; their texture and thinness are inappropriate for Salt Lake City's historic buildings. A more acceptable alternative, if the original windows are beyond reasonable repair, are aluminum clad wood windows with baked enamel finishes.

- Historic wood and metal windows are sustainable. They represent embodied energy, are made of materials natural to the environment and are renewable.

- Vinyl windows cannot be recycled and are detrimental to the environment when they are thrown away.

Original sash windows at 68-72 S Main Street (above), and original metal casement windows on Firestone Tire & Rubber Company Building at 308 W 300 South (right).

4.0 WINDOWS

Transoms

Transoms are traditional components of storefronts of the late 19th and early 20th centuries. On the practical side, transoms allowed additional natural light in stores. They also offered additional opportunities for visual interest and decorative detail. Transoms appear above display windows and doors; preserve these, as they are key architectural features of storefronts and entrances. Preserve, maintain and, if necessary, repair original transoms. This is especially important for decorative glass such as Luxfer glass or other decorative divided glass.

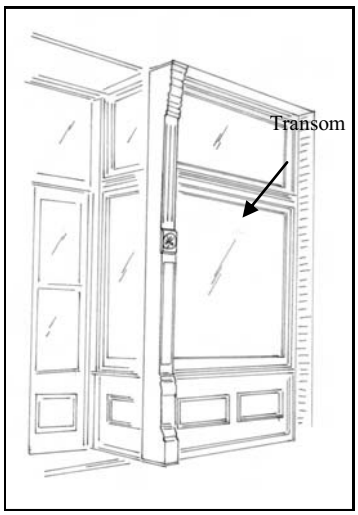

The distinctive Luxfer glass transom on the New Grand Hotel at 369 S Main Street is intact and not concealed.

Storm Windows

The installation of storm windows can help in lowering energy costs and is an appropriate treatment for older structures. Storm windows provide additional protection from the weather and can be effective tools in retaining historic windows. They must, however, be carefully integrated with historic framing and details.

4.0 WINDOWS

Select storm windows that are full-view design. Storm windows may have a central meeting rail at the same location as the historic window behind it. Select painted wood, anodized aluminum or baked enamel storm windows, preferably matching materials of the original or historic windows. Unfinished aluminum storm windows are not allowed. The addition of window screens to historic windows is appropriate as long as the screens are full-view design or have a central meeting rail to match the historic window.

Security Doors and Windows

Security is an important issue to commercial businesses and many owners choose to install security doors and windows to protect their properties. There are increasingly broader options for security including the addition of alarms and video surveillance. If security doors or windows are installed, ensure they do not damage or detract from the building's historic character and appearance.

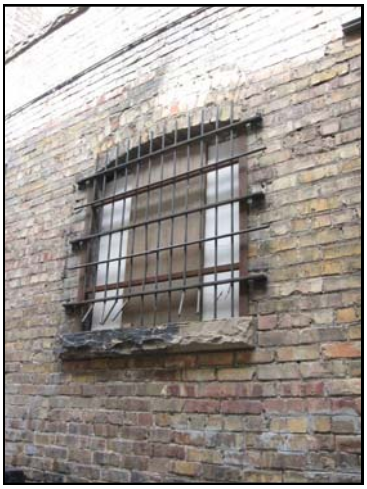

Security bars are more appropriate on side or rear elevations.

The installation of non-obtrusive security doors and appropriate burglar guards can be approved. Although less appropriate on façades, security doors may be installed if they are full view design or have minimal structural framing that allows the viewing of the historic door behind it. Ornate security doors with extensive grillwork or decorative detailing are not allowed. Ensure burglar guards are as visually unobtrusive as possible. More recently, security grilles and storm/screen windows and doors have been added to buildings for additional protection from the weather. These items must be carefully detailed to integrate with historic framing and details on individual structures.

4.0 WINDOWS

Treatment of historic wood windows

4.1 Preserve and maintain original windows. Window openings, windows, window details, and the size and shape of these elements help establish rhythm, scale and proportion of buildings and reflect architectural style and character

4.2 Repair deteriorating wood windows as needed. When possible, replace missing panes or damaged sashes rather than entire windows. Retaining as much of the historic window material and detail as possible will help protect the building's historic character and appearance. Replace only those elements necessary. Use epoxy to strengthen deteriorated wood.

Preserve and maintain original windows such as at 32 Exchange Place.

Treatment of historic steel, aluminum, bronze and other metal windows

4.3 Preserve, maintain and repair original windows. Metal windows such as steel, aluminum and bronze were introduced and widely used into the mid-20th century. Preserving these materials as well as their original design and detail is recommended. Make repairs with materials that match the original as closely as possible.

Metal windows are sometimes replaced due to concerns over energy conservation. In the 1950s and 1960s, aluminum windows were often installed with single glazing on large curtain walls resulting in poor energy efficiency. The energy performance of metal windows can be enhanced by applying weather stripping and security fittings. Spring-metal, vinyl strips, compressible foam tapes and sealant beads are other weather stripping options. A window's original single glazed glass may also be replaced with thermal glass panes (3/8" to 5/8" thick) provided that the rolled metal sections are at least 1" wide and the design of the historic window is retained. Another option for improving energy efficient is the installation of storm windows.

Original steel casement window at 702 N 'K' Street. This window is significant to the design and character of the building.

It may be necessary to consult with a historic architect, architectural conservator, or experienced contractor to determine the appropriate treatment.

4.0 WINDOWS

Replacement Windows

4.4 Replace windows only if they are beyond repair, and match replacements to the original in size, materials, and number and arrangement of lights. Wood is the preferred material, but other acceptable alternatives may be aluminum clad wood or aluminum. Most major window manufacturers have appropriately sized wood windows for historic commercial buildings. Anodized or baked-on enamel aluminum in white or dark finishes is also appropriate; however, for multi-story buildings consider installing wood windows on the second story and baked or anodized aluminum windows on the third floor and above. Replace historic metal windows with like materials.

These one-over-one sash windows are a good example of replacement windows. They match the historical design and configuration of the original windows.

In addition to materials, the primary concern for replacement windows is matching the appearance of a historic wood or metal window through appropriate dimensions, depth of frame, and the appearance of true divided lights. True divided lights for windows are preferred or windows with lights that are bonded to the glass with spacers and appropriate grid profiles.

It is possible to consider alternative materials in some special cases, if the resulting appearance of the window will match that of the original in terms of design, finish of the material, and its proportions and profile.

Transoms

4.5 Preserve and maintain original transom glass and framing. Transoms add distinct character and are important storefront elements. Repair transoms as necessary with materials that match the original.

Original transoms enhance historic character and are important elements of commercial storefronts.
Above: 361 N Main Street
Below: 271 N Center Street

4.6 Do not obscure transom lights. Do not cover or conceal transoms with signs, the introduction of new materials, or other items. Awnings are allowable as they do not obscure transoms from complete view.

4.0 WINDOWS

Storm Windows

4.7 Install storm windows and doors of appropriate material and design so as not to detract from the building's historic appearance. Select storm windows and doors of wood, baked-on enamel or anodized aluminum, and ensure they fit within the window frames, not overlap the frames. Select storm windows of full-view design or with the central meeting rail at the same location as the historic window. Select storm doors of full-view or half-light design. Ensure they are compatible with the existing door and do not obscure or cover architectural features.

Security Doors and Windows

4.8 Security doors are most appropriate for rear and side façades. Entrances on primary façades are key focal points and visual elements of historic buildings, and security doors can detract from their historic appearance. Entrances on side and rear facades are less visible and more appropriate for security doors and windows.

4.9 Install security doors and windows that are full-view design or have a central meeting rail that matches the historic door or window. A full-view design allows the visibility of the historic door. Security doors with ornate or decorative grillwork obscure historic features and are not appropriate.

Security doors and windows are most appropriate on rear or side elevations.

Left: 89 N 'D' Street *Right: 68 N 'K' Street*

5.0 ARCHITECTURAL DETAILS

Policy

Preserve and maintain historic architectural details and features, as they are important stylistic elements that help to define a building's character. Do not remove or conceal historic architectural details. If repair or replacement is necessary, match replacements to the original as closely as possible in material, design, color, and texture.

Preserve and maintain architectural details, 145 S State Street.

Architectural details exhibit craftsmanship and help convey a building's distinct character. Above: Felt Building, 341 S Main Street.

Background

Architectural details convey historic character by adding visual interest, defining building styles, and exhibiting design and craftsmanship. Architectural details include features such as columns, pilasters, window hoods and surrounds, brackets, cornices, and decorative panels, windows, and ornamentation. A variety of finishes and materials, including brick, stone, concrete, metal, and tile, are used to provide unique features of individual buildings.

In recent years, there has been growing attention to the strengthening of cornices at risk from seismic activity. A historic cornice can be secured by installing a continuous (horizontal) channel across its surface with pins imbedded vertically into the cornice. A steel angle brace is welded to the channel and attached with a lag bolt to the roof.

It may be necessary to consult with a historic architect, architectural conservator, or experienced contractor to determine the appropriate treatment. For more information on architectural details, please refer to *Design Guidelines for Residential Historic Districts in Salt Lake City,* page 93.

5.0 ARCHITECTURAL DETAILS

Cornices

Cornices are important in providing decoration at the tops of buildings. Cornice designs are often associated with particular architectural styles and their preservation is important to maintaining the historic character of buildings. Preserve and maintain historic cornices. Do not remove, conceal or cover historic cornices with modern materials. Ensure repairs are in keeping with the configuration, details, and materials of the original cornice.

Salt Lake City commercial buildings offer a wide variety of cornice styles and materials, each giving its building distinct character and identity.

Above: A wood cornice at 682 S 700 East.

Top left: A corbelled brick cornice at 89 N 'D' Street.

Center left: A copper cornice on the Judge Building at 301 S Main Street.

Bottom left: A stone cornice on Brooks Arcade at 268 S State Street.

5.0 ARCHITECTURAL DETAILS

5.1 Retain and maintain historic architectural details and features; do not cover or conceal them. Historic architectural features convey style, character, and craftsmanship, thus preserving and maintaining these elements is important in retaining a building's historic integrity. Likewise, the removal or concealment of original architectural details will detract from a building's historic character. Proper care and maintenance will help to ensure the longevity of architectural details and features.

Preserve and maintain details such as this decorative keystone at 32 Exchange Place.

5.2 Cleaning is warranted only for serious staining. Clean architectural details and features only when necessary in order to prolong their lifespan. In general, water, mild detergent, and brushes are appropriate cleaning tools. For more complicated situations, consult with an architectural conservator, historic architect, or contractor with extensive experience working with historic buildings.

Above: Orpheum Theatre (Promised Valley), 132 S State Street.

5.3 When repairing deteriorated or damaged historic architectural features, use the methods that allow them to retain their historic appearance and as much of the building's historic fabric as possible. For decaying wood, it is appropriate to apply epoxy to strengthen damaged areas and fill in small openings. For large areas of decay, cutting out damaged areas and piecing new wood into the gap is appropriate. For lightly corroded metal features, hand scraping or chipping or use of a wire brush are appropriate ways to remove rust and damaged paint. If corrosion is heavy, alternative methods include low pressure grit or sand blasting, flame cleaning, and chemical treatment. These latter methods are more hazardous; consult a professional. For their protection, cover adjacent materials such as brick, glass, and wood during grit blasting. Paint metal pieces immediately following rust and paint removal. Epoxies may be used to fill small gaps. It may be necessary to consult with a historic architect, architectural conservator, or experienced contractor to determine the appropriate treatment.

Decorative elements such as this statue at the Promised Valley Theatre are part of a building's unique identity.

5.0 ARCHITECTURAL DETAILS

5.4 Do not add architectural features to buildings where none historically existed. Architectural details and features are inherent visible elements of the historic style and appearance of a building, and just as taking away original features will alter a building's historic character, introducing elements will also compromise the building's historic integrity.

5.5 Replace missing or severely damaged historic architectural details and features with examples that replicate the original. Match replacements to the original in design, proportion, and detail. Original details may be documented through photographs, drawings, graphics, or physical evidence. Where no such evidence exists, a simple design in keeping with the building's historic architectural style and period is appropriate.

Replication with the same materials is encouraged but substitute materials may be considered if they successfully match the original detail appearance. The use of substitute materials may be especially appropriate where they are not readily visible from the street such as along upper facades and cornices.

Classical columns and an accentuated entrance are key architectural features of 151 S Main Street.

5.0 ARCHITECTURAL DETAILS

Cornices

5.6 Preserve and maintain historic cornices. Cornices are prominent visible and often decorative features of historic buildings and help to define their character. Do not remove, conceal or cover original cornices with modern materials.

Preserve and maintain historic cornices (Broadway Hotel, 222 W 300 South).

5.7 Do not add cornices to a building if the building appears to have never had such a feature. Adding elements to historic buildings that were not there originally detracts from the building's integrity.

5.8 When replacing a missing cornice, match the original in style, materials, size, and design. In cases where original cornices are missing, rehabilitation through the installation of new cornices based on physical or pictorial evidence of the original design is encouraged. The Utah State Historical Society, Salt Lake County Archives Office and other local repositories have excellent photographic coverage of Salt Lake City from the 19th and early 20th centuries. However, if no historical, physical and/or pictorial evidence exists for a particular building, new cornices may be of a new design that is compatible in size, scale, and materials.

Architectural details of the Capitol Theatre include an ornate cornice and decorative window hoods and surrounds.

6.0 ROOFS

Policy

Roofs help to determine building style and are important elements of historic appearance. Retain historic roof shapes. Limit public visibility of modern features.

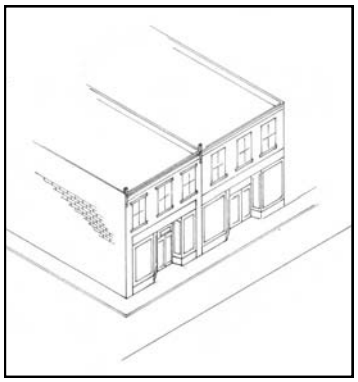

Most historic commercial buildings were designed with flat or sloping roofs.

Background

Roof shape and design are often major features for historic buildings. Repetitions of similar roof forms along a street or block add to the sense of rhythm, scale, and cohesiveness. Roof pitch, materials, size, and orientation are all contributing factors to roof character and appearance. The most common roof forms for commercial buildings are flat or shed roofs, with gable and hipped forms being less common. Common commercial roof features include parapets, cornices, and decorative elements such as finials and cresting.

Original chimney, 68 N 'K' Street.

Chimneys

Chimneys are generally not prominent features on commercial buildings. Most commercial buildings utilized brick flues to release heat and these were located along side or rear walls and generally were not visible.

Retain and maintain original chimneys, even if they do not serve their historic function. Removing an original chimney lessens a property's architectural integrity as well as a traditional building pattern indicative of a property's history. Maintain and preserve chimneys in accordance with the primary materials guidelines.

For more information on roofs, please refer to *Design Guidelines for Residential Historic Districts in Salt Lake City,* page 97.

6.0 ROOFS

Gutters and Downspouts

Gutters and down spouts are important utilitarian elements of buildings. Boxed or built-in gutters are the style most traditionally used through the mid-20th century. The installation of gutters and downspouts is important to the maintenance of buildings as they provide proper drainage and prevent water damage to roofs, walls, and foundations.

Regularly inspect and maintain gutters and downspouts help to protect buildings from water damage. Preserve and maintain built -in box gutters or hidden gutters as needed. Ogee or "K" design gutters may be considered, if there is no evidence of an external gutter or the original design of a gutter.

Appropriate rear gutter and downspout at 784 N 300 West.

Skylights

Skylights typically are modern additions to buildings that can add more natural light to a building's interior. The addition of skylights to a historic building is appropriate if their installation does not damage any significant architectural feature and their placement is such that they cause minimal visual impact to the historic appearance of the building.

The installation of skylights is appropriate as long as they are placed on rear roof lines, behind gables or dormers, or otherwise not visually dominant. Skylights which are flush with the roofline or lie flat are appropriate. Preserve and maintain light wells with skylights on top, found on older buildings.

6.0 ROOFS

6.1 Retain historic roof shapes and features. Preserve roofs in their original size, shape and pitch, with original features (such as cresting, finials, etc.). Retain and preserve roof features such as parapets, cornices, and chimney flues.

6.2 Do not introduce new roof elements that detract from the building's historic appearance and character. Ensure new roof elements such as skylights, solar panels, decks, balconies, and satellite dishes are not highly visible from the street or obscure original features.

Maintain historic roof shapes and chimneys.

271 N Center Street

Chimneys

6.3 Do not remove or alter original chimneys. Preserve original chimneys even if they are no longer functioning as they are important architectural features. Do not cover chimneys with stucco or other veneers unless they were original. Concrete, slate, unglazed terra cotta and stone caps are appropriate.

6.4 Care for chimneys following the guidelines for brickwork/ masonry. When necessary use gentle cleaning methods. Use soft, historic mortar compounds that match the original when repointing.

6.5 If chimneys become unstable, rebuild the chimney matching the original as closely as possible. Chimneys may be rebuilt or supported if they become unstable or damaged. Physical structural supports may include metal straps or brackets anchored to the roof framing. Match repairs to historic materials, shapes, mortar, material color, and brick patterns.

82 E 400 South

70 N 'F' Street

6.0 ROOFS

Gutters and Downspouts

6.6 Install and maintain gutters, downspouts, and splash blocks. Retain existing boxed or built-in gutters and keep them in good working order. Repair deteriorated or damaged gutters.

6.7 If original gutters are beyond repair, install replacement gutters of an appropriate type. The most appropriate design for hanging gutters is half round. For buildings dating from or influenced by designs from the 1940s or later, ogee gutters are also appropriate.

6.8 Locate downspouts away from architectural features and on the least public elevation of the building. Proper placement of downspouts will protect the building and not detract from its historic character. Ensure downspouts drain away from foundations and do not affect neighboring buildings.

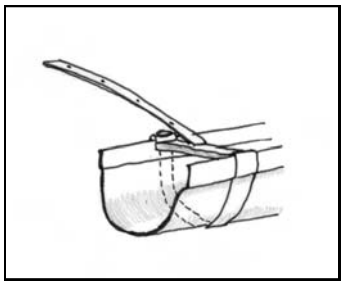

Half round gutters, as shown above, are the most appropriate for Salt Lake City's historic buildings. Ogee gutters, below, may be acceptable for post-1940 structures.

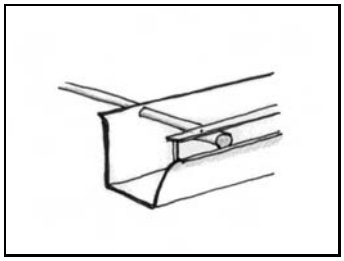

Appropriate downspout and splash block.

Skylights

6.9 Preserve and maintain skylights that are original to a building.

6.10 Place skylights in inconspicuous areas where they will not detract from the historic appearance of the building. Place added skylights on rear rooflines or behind gables, parapets, or dormers. Ensure skylights are not readily visible from the street.

6.11 Use appropriate skylight design. When installing skylights, the most appropriate styles are those that lie flat or flush with the roofline. Convex or "bubble" designs are not allowed.

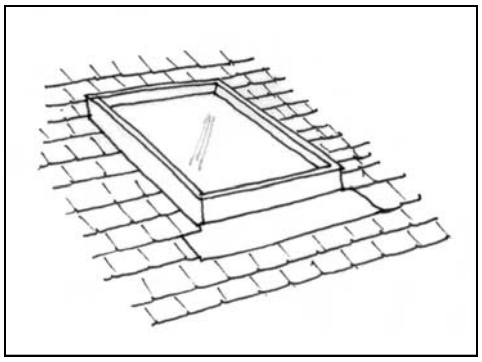

Skylights which are flush with the roof and not readily visible from the street are appropriate for commercial buildings.

7.0 FOUNDATIONS

Policy

Foundations in Salt Lake City are most often brick, stone, or concrete masonry walls. Preserve and maintain original foundation materials. Ensure foundations are repaired and maintained in keeping with masonry guidelines.

Background

Historic commercial building foundations are typically of brick, stone, or concrete. Proper maintenance and repairs will help insure the longevity of historic foundations. During winter months it is important to avoid contact between foundations and salts or other ice melts to prevent destructive effects on historic masonry.

A concrete foundation at 422-426 N 300 West.

7.1 Preserve and maintain original foundations. Maintain original foundation materials, design and detailing. Do not cover original foundations with concrete block, plywood panels, corrugated metal, or wood shingles.

7.2 Follow masonry guidelines for cleaning, care, and repair of masonry foundations.

7.3 If replacement foundations are necessary, match the original as closely as possible. Match replacement materials for foundations to the historic foundation and install using similar construction techniques.

7.4 Keep water away from foundations as much as possible. Keep irrigation devices at least 3' away from foundations and direct all spray away. Also keep woody shrubs and trees away to prevent damage to historic materials. Ensure downspouts drain away from foundations through the use of splashblocks, drains, site grading etc.

It may be necessary to consult with a historic architect, architectural conservator, or experienced contractor to determine the appropriate treatment.

8.0 ADDITIONS

Policy

For additions, select design, materials, and placement that minimize their effect on the historic appearance and character of the building and district. Ensure additions are compatible in size, scale, and design with the historic building.

Background

Additions provide owners with flexibility in their building use. As businesses grow and change, they often require more space, and additions fill this need. When adding to historic commercial buildings, the most important consideration is to maintain the building's historic character and appearance. Ensure additions are compatible with the historic building's style, scale, and form. For more information on additions, please refer to *Design Guidelines for Residential Historic Districts in Salt Lake City,* page105.

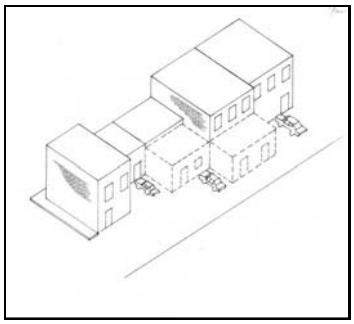

Shown is appropriate placement for ground level additions.

Rear elevations are best for additions to commercial properties.

Rear Additions

Rear façades are the most favorable locations for additions on historic commercial properties. Rear additions are less visually obtrusive and allow the historic primary façade to remain intact. Ensure size and scale of rear additions do not overwhelm the original building and do not damage historic architectural features.

Lateral Additions

Lateral additions are less preferable than rear additions, but may be considered. It is important that the size and scale of new lateral additions be smaller than the original building, and that such additions not detract from the historic form and character of the original building. Ensure construction of lateral additions does not obscure or damage significant architectural features of the building.

8.0 ADDITIONS

Roofline Additions

Often the only option to expand usable interior space in a building is to go up. If this is the case for a historic building, it is important that the rooftop addition be recessed sufficiently from the façade so that the addition is not readily visible from the street.

Decks

Decks are modern additions to buildings, and their addition to commercial buildings is rare. However, if a property owner chooses to construct a deck on his or her historic property, it is important that its addition not damage or conceal significant historic architectural features, and that the deck does not adversely impact the historic appearance or character of the building. If adding a deck to a historic building, construct it on the building's rear façades or another location that is not visible from the street.

Fire Escapes

Multi-story buildings used for commercial and/or residential purposes often require exterior fire escapes to meet fire and safety codes. Fire escapes traditionally are sited on the rear or side façades of buildings, where they are not visible from the street. For more information on fire escapes, see pages 97 and 143 of this manual.

8.0 ADDITIONS

Rear Additions

8.1 Construct additions that are compatible with the original building in scale, proportion, rhythm, and materials. Ensure the overall design of the addition is in keeping with the character of the historic building and does not detract from its historic character. Ensure elements such as roof pitch, materials, window design, window placement and rhythm, ratio of solids to voids, and general form of the addition are compatible with those of the original building. Pay particular attention to drainage details such that new drainage patterns do not accelerate deterioration of historic materials.

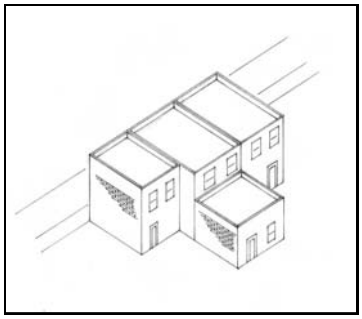

The location, scale, proportion, rhythm, materials, and size of this addition are all appropriate.

8.2 Construct rear additions that are smaller and simpler in design than the historic building. Construct the addition to be subordinate in size to the overall building. Ensure its size and design complement and not overwhelm the building. Ensure rear additions are not readily visible from the street. The addition needs to be visually compatible but also distinguishable from the historic building. Subtle differences in materials or styles can help clarify new from original portions of the structure.

8.3 Construct rear additions that do not obscure or damage significant architectural features. Avoid loss or alteration of cornices, architectural details, and other important features. Ensure additions cause minimal damage to significant materials and are constructed in a way that minimizes the overall loss of historic walls or roofs. Use existing openings to connect the building and the addition. Pay particular attention to drainage details such that new drainage patterns do not accelerate deterioration of historic materials.

It may be necessary to consult with a historic architect, architectural conservator, or experienced contractor to determine the appropriate treatment.

8.0 ADDITIONS

Lateral Additions

8.4 Construct lateral additions that are compatible with the original building in scale, proportion, rhythm, and materials. Ensure overall design of an addition is in keeping with the character of the historic building and does not detract from its historic character. Ensure elements such as roof pitch, materials, window design, window placement and rhythm, ratio of solids to voids, and general form of the addition complement those of the original building.

8.5 Construct lateral additions of mass and scale that are subordinate to that of the historic building. Ensure lateral additions are as visually unobtrusive as possible and do not detract from the historic form and character of the original building. Set back lateral additions from the front wall plane of the original building. Ensure their size and design complement and do not overwhelm the building.

8.6 Design lateral additions so that they will not obscure or damage significant architectural features. Avoid loss or alteration of cornices, architectural details, and other character-defining features. Ensure additions cause minimal damage to significant materials and are constructed in a way that minimizes the overall loss of historic walls or roofs. Use existing openings to connect the building and the addition. Pay particular attention to drainage details such that new drainage patterns do not accelerate deterioration of historic materials.

8.7 Construct additions that are distinguishable from the historic building and a product of their own time. Ensure additions are visually compatible with the historic building, but also reflect their own era through subtle differences in materials and/or styles. Subtle differences in materials or styles can help clarify new from original portions of the structure.

8.0 ADDITIONS

Roofline Additions

8.8 Construct rooftop additions of mass and scale that are subordinate to that of the historic building. Construct rooftop additions to be smaller and simpler in design than the historic building. Ensure upper story additions do not overhang the lower floors.

8.9 Construct rooftop additions with similar roof forms to the buildings to which they are attached. Mimic the roof form of original building in the addition. For example, if the original building has a flat roof, then make the addition's roof flat as well.

8.10 not allow additions to cause the removal of character-defining materials and features. Ensure the addition's design and placement do not obscure or damage significant architectural features including cornices and parapets.

8.11 Construct rooftop additions that are recessed and not readily visible from the street. Maintain the original profile of the historic building. Preserve the mass and scale of the original façade; do not allow the rooftop addition to overwhelm the original façade. Ensure rooftop additions are not readily visible from the street level.

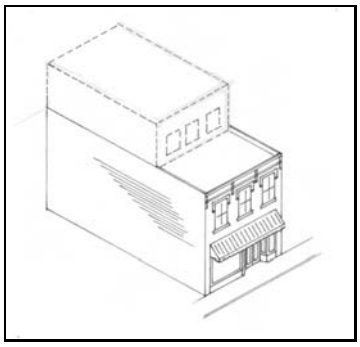

Recess rooftop additions so that they are not readily visible from the street. Mimic roof forms of the main building in the addition.

It may be necessary to consult with a historic architect, architectural conservator, or experienced contractor to determine the appropriate treatment.

8.0 ADDITIONS

Decks

8.12 Locate decks where they are not visible from the street. Locate decks on the rear façades of buildings. They may also be located on a side elevation if screened from view from the street via fencing or plants. They may also be located on the roof if screened from view through either placement or existing roof parapets.

8.13 Keep decks design simple. In order not to detract from the historic architecture, keep decks simple in design. Space balusters less than three inches apart.

8.14 Construct decks of materials similar to those used on historic buildings; however, decks of alternative materials may also be acceptable if not readily visible from the street.

8.15 Stain or paint decks in colors that are compatible with those of the building.

Rear decks of wood construction are appropriate on rear elevations not readily visible from the street.

Fire Escapes

8.16 Retain original fire escapes when possible. Retain original fire escapes and keep them in good working order. Repair is preferable to replacement of a historic fire escape. If repair is not possible, replace a fire escape in kind as closely as possible.

Decks such as this second floor addition at 68 N 'K' Street are appropriate as long as they are not readily visible from the street and are located at rear elevations.

Historic fire escape at 379 S Main Street.

9.0 ACCESSIBILITY

Policy

Ensure that primary entrances to commercial buildings meet ADA requirements. If this is not possible, make alternative entrances available, clearly mark them and maintain them to the same guidelines as the primary entrance. If access ramps are needed, simple designs compatible with the building's historic character are recommended for main entrances.

Background

The Americans with Disabilities Act (ADA) was passed in 1990 and requires that all places of public accommodation be accessible to everyone. Historic commercial buildings must meet ADA requirements. Local and state codes apply as well. Property owners need to consult the Americans with Disability Act Accessibility Guidelines (ADAAG) when complying with ADA requirements. State and local requirements, however, may differ from the ADA requirements, and property owners need to be aware of all applicable accessibility requirements before making any modifications to their buildings.

An appropriate access ramp at 569 E 2nd Avenue.

Compliance with ADA, however, does not mean that the historic integrity of a building has to be compromised. Property owners can reach the goal of providing a high level of accessibility without compromising significant features or overall character of their historic property. Creative solutions include incorporating ramps, installing wheelchair lifts, creating new entrances, and modifying doors, hardware, and thresholds. In addition, alternative measures can be considered if there is a threat to the historic resource. If at all possible, maintain access to historic buildings through a primary public entrance. If this cannot be done without causing permanent damage to significant features of the building, then make a secondary public entrance accessible. In these instances, provide directional signs to the accessible entrance. Avoid using rear or service entrances as the only accessible entrance.

9.0 ACCESSIBILITY

Installation of permanent ramps is one of the most common solution to accessibility issues. Ensure the design and location of ramps are such that they do not compromise a building's historic character. Simple designs are best with railings distinguishable from historic features. A variety of materials, including wood, metal, brick and stone, are appropriate to face the ramps. For ramp construction do not use unpainted pressure-treated wood, which has a temporary appearance and is not visually compatible with most historic properties. Temporary or portable ramps of light-weight materials are often unsafe and are not visually compatible with historic buildings. While not recommended as a permanent element, temporary ramps may be used as an interim solution until a permanent solution is achieved.

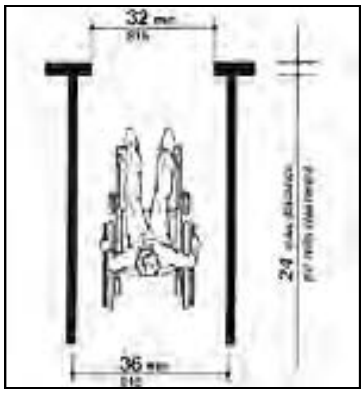

Make new entrances or retrofitted doors a minimum of 32 inches in width to meet ADA guidelines.

The steepest allowable slope for a ramp is usually 1:12 (8%), but gentler slopes are better when possible. Most codes will allow a slightly steeper ramp for historic buildings to overcome one step. Ramp landings need to be large enough to accommodate wheelchairs, typically a minimum of 5' x 5'.

When retrofitting doors to allow accessibility, maintain historic doors; do not widen door frames on facades. If historic doors are missing, widening the entrance is a possibility. Typical guidelines require a minimum of a 32" clear opening with manageable door opening pressures. Ideally, retain and upgrade historic doors with a device to reduce door pressure.

Doors can also be modified with pressurized door openers to allow for ease of access.

For more information on accessibility, please refer to *Design Guidelines for Residential Historic Districts in Salt Lake City,* page 135 and also *National Park Service Preservation Brief 32, Making Historic Properties Accessible.*

9.0 ACCESSIBILITY

9.1 Accessibility solutions must meet all state and local accessibility requirements as well as ADA mandates.

9.2 Provide accessibility solutions of the highest level of access and the least impact on the building's historic character. Identify and evaluate accessibility options within a preservation context. Avoid damage to significant features and materials .

9.3 Locate access ramps where they will have the least visual impact on the building's historic character.

9.4 Keep access ramps simple in design. Simple designs will be more compatible with historic buildings. Construct ramps of concrete, metal or wood and painted in colors that are compatible with those of the building.

9.5 Avoid use of temporary ramps. These ramps may be used as an interim solution to provide access until a more permanent solution is created.

9.6 If historic doors do not allow for universal access, retrofit replacement doors to meet guidelines. The use of automatic door openers with push plates is also an alternative to meet ADA door requirements on commercial buildings.

Push plates for ADA access are appropriate solutions for access into commercial buildings.

It may be necessary to consult with a historic architect, architectural conservator, or experienced contractor to determine the appropriate treatment.

Design new storefronts with lever door handles and appropriate entrance widths.

10.0 SEISMIC DESIGN

Policy

Methods of reducing the risk of earthquake damage have improved in recent decades, and owners of historic properties may elect to retrofit their buildings to better withstand seismic activity. Ensure such upgrading is sensitive to historic features and materials and minimize any negative impact to the building's historic architecture and appearance.

Background

Most historic buildings were constructed when little was known about seismic design thus increasing their vulnerability in the event of an earthquake. Modern technologies; however, have made it possible to retrofit historic buildings to improve their ability to withstand such an event. Upgrades to foundations, floors, ceilings, walls, columns, and roofs, can greatly improve a building's resistance to seismic activity.

Seismic strength within a building is achieved through the reinforcement of structural elements. Traditional methods of strengthening include anchored ties, reinforced mortar joints, braced frames, bond beams, moment-resisting frames, shear walls, and horizontal diaphragms. Historic buildings can use these methods successfully, if they are designed to conform to the historic character of the building. For more information on seismic design, please refer to *Design Guidelines for Residential Historic Districts in Salt Lake City*, page 117.

For additional information, refer to: Utah Division of State History, Office of Preservation. "Bracing for the Big One: Seismic Retrofit of Historic Houses," 1993.

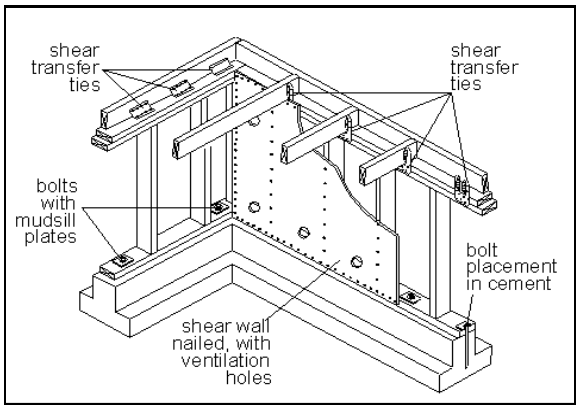

Typical seismic retrofitting includes reinforcing the foundation through added ties, bolts and plates.

10.0 SEISMIC DESIGN

10.1 Undertake seismic retrofitting of a historic building in a manner that will have the least impact on the building's historic architectural appearance. To minimize impact on the historic architecture of a building, locate materials used in seismic retrofitting on the interior and/or blend with existing architectural features.

10.2 Preserve and retain historic materials to the greatest extent possible. **Do the least amount of damage possible to historic materials in seismic retrofitting.** Ensure seismic retrofitting methods have minimal impact on historic materials. While loss of some may be necessary, ensure historic material is not replaced wholesale in the process of seismic retrofitting.

Seismic design for a historic building should include consultation with an architectural conservator, historic architect, or contractor with extensive experience working with historic buildings.

10.3 Respect the character and integrity of the historic building. in seismic retrofitting with visually compatible design. Whether seismic retrofitting systems are hidden or exposed, ensure they do not detract from the historic character of a building.

10.4 Make seismic work "reversible" to the greatest extent possible. If seismic work is reversible it will allow for traditional repair of remaining historic materials, and provide an opportunity for the application of future improved systems.

Seismic retrofitting can include adding steel frames and dampers in basement and parking areas of commercial buildings.

11.0 STREETSCAPE ELEMENTS

Policy

Streetscape elements include lighting, planter boxes, street furniture, bike racks, and sidewalks. Enhancement of the streetscape through the addition of these elements is encouraged.

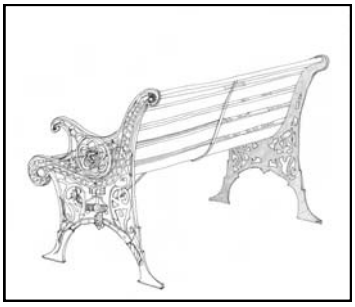

The addition of streetscape elements such as benches is encouraged.

Background

Salt Lake City has invested in streetscape improvements in the commercial areas and should continue to enhance streetscape elements through benches, planters and landscaping. Major streetscape improvements considered in the future should be consistent with the historic character of an area and follow traditional designs and landscaping. Modern interpretations of streetscape elements may also be appropriate. For additional information on streetscape elements, please refer to *Design Guidelines for Residential Historic Districts in Salt Lake City*.

Investments such as this streetscape planter on the 200 block of S Main Street enhance commercial areas and are encouraged.

11.1 Enhance commercial areas with streetscape elements. Elements such as benches and planters make commercial areas more attractive and enjoyable.

11.2 Maintain a consistent historic character of the commercial area in major streetscape improvements considered in the future. Ensure streetscape element designs is compatible in design and style with the surrounding streetscape and built environment.

11.3 Ensure that landscaping does not damage historic buildings or conceal historic elements.

11.4 Ensure that outdoor furniture is of interesting appearance and appropriate materials and does not impede pedestrian flow.

12.0 MECHANICAL EQUIPTMENT AND FIRE ESCAPES

Policy

Mechanical equipment, service utility devices, and fire escapes should be sited where they are not readily visible. They should be placed in inconspicuous areas, be as unobtrusive as possible, and screened with landscaping or fencing. If affixed to a building, devices should be installed to avoid damaging the property. Conduits should be painted to blend with the color of the building.

Heating and cooling units should be located at rear elevations such as shown here or on rooftop areas no t visible from the street.

Background

Modern developments in communication and energy have resulted in the increased use of devices such as satellite dishes, solar panels and air conditioning systems. Commercial buildings also require trash and recycling storage areas and other equipment. These elements can be effectively integrated into historic properties without detracting from their historic character as long as property owners are conscientious about their placement and installment.

Mechanical systems, utility boxes, trash receptacles, and other service elements should be placed in inconspicuous areas where they are not readily visible from the street. Satellite dishes, solar panels, and other communication or energy devices should be located as unobtrusively as possible. Rear walls or rear roof slopes are the best locations for these devices.

This HVAC system at 271 N Center Street is situated in an inconspicuous area on the rear elevation.

12.0 MECHANICAL EQUIPTMENT AND FIRE ESCAPES

Satellite Dishes

12.1 Install satellite dishes in inconspicuous areas where they are not readily visible from the street. Locate them on the rear façade or rear roof slopes and do not mount them on primary façades of a building.

12.2 Satellite dishes that are small in size are more appropriate than larger ones.

Rooftops are the preferred location for solar panels.

Solar Devices and Systems

12.3 Locate solar devices and systems where they are least visible and obtrusive and cause the least impact to the integrity of the historic building. Rooftops, rear lots or rear accessory buildings that are not readily visible from public right-of-ways (except alleys), if available, are the preferred locations for solar devices. Side lots in a location that is not readily visible from the primary street are also options. If readily visible, solar panels are most appropriate when placed in roof lines.

This roof mechanical system is set back so that it is not readily visible from the street.

12.4 It is preferred that solar panels be located where they are the least visible from the street. Rear façades or rear roof slopes or accessory structures are the best location for solar devices. Solar panels on the primary façade of a building are not recommended.

12.5 Ensure that solar panels that are attached to a building are not readily visible from the street. Mount solar panels on rooftops flush with the roofline or hidden behind cornices or parapet walls. If not attached to the building, locate solar panels in side or rear yards. Do not use hardware, frames, and piping with a non-reflective finish.

Utilities

12.6 Locate ground-mounted mechanical systems behind or on top of buildings. If on the ground, screen them from view using fencing or plants. If on top of buildings, set them back or behind a parapet, not visible from the street. Add screening to assist in dampening the noise from mechanical systems, particularly in residential areas.

12.0 MECHANICAL EQUIPTMENT AND FIRE ESCAPES

12.7 Locate window-mounted mechanical systems on the side or rear façades; their visibility should be minimal.

12.8 Locate meters, conduits, and other equipment on rear elevations.

Meters at 39 N 'I' Street are correctly placed on a non-primary elevation.

Trash and Recycling Storage Areas

12.9 Place garbage containers behind buildings and screen them from view. Conceal dumpsters and other garbage containers with fencing or plants. In residential areas, locate these to have a minimal impact on adjacent residences.

Fire Escapes

12.10 Locate fire escapes on rear façades or otherwise located so they are not visible from the street. Fire escapes are important safety features as a means of escape from upper floors. Fire escapes traditionally are located on the rear or side façades of buildings; site fire escapes that are added to historic buildings in these locations where they will not be readily visible.

This metal fire escape has been appropriately added to the side elevation.

12.11 Ensure that the addition of fire escapes does not damage historic architectural features.

12.12 Fire escapes may be either open or enclosed. For enclosed fire escape surfaces, select materials matching or compatible with those used on the historic building. For open fire escape surfaces, use metal or alternative materials

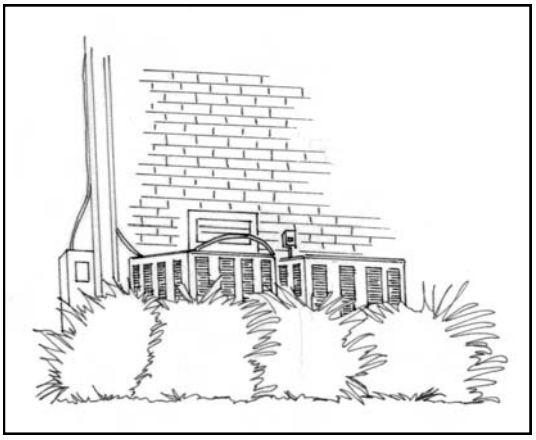

Conceal mechanical systems with landscaping.

GUIDELINES FOR NEW COMMERCIAL CONSTRUCTION

13.0 NEW COMMERCIAL CONSTRUCTION

Policy

New construction for Salt Lake City's commercial historic properties should be compatible with adjacent buildings primarily in scale, mass, and height, and secondarily in materials, orientation, shape, placement, and rhythm and proportion of openings. Do not attempt to replicate historic styles in the design of a newly constructed building, but allow it to stand as a product of its own time while being compatible with the surrounding historic built environment.

DESIGN CONSIDERATIONS

Basic Approach

Where historic buildings have been lost or where there are vacant lots, new construction is encouraged to add to the streetscape and promote economic development within historic districts. While constructing a new building within a historic district can be a challenge, careful thought and planning can result in a design that is compatible with the historic surroundings.

The fundamental underlying concept in designing new buildings for historic districts is that the new building must be both compatible with the historic character of the district and be a product of its own time, or in other words not replicate historic designs. It is a common misconception that newly constructed buildings should look "old" and should imitate historic structures. It is important to realize that while historic districts do convey a sense of time and place associated with their history, these areas are not frozen in time and continue to be dynamic evolving communities.
And, it is important that new buildings constructed within a district reflect their own time to allow the evolution of the street to be apparent. Imitation of historic architectural styles is discouraged because it makes it more difficult to distinguish older historic buildings from newer ones and can make interpretation of the neighborhood confusing.

13.0 NEW COMMERCIAL CONSTRUCTION

At the same time, designs for new construction should not seek to heavily contrast with the existing built environment. Designs that are meant to conflict with the older buildings simply for the sake of being different are discouraged. Instead, designs for new buildings should strive to be compatible with the historic surroundings.

New construction within a historic district should reinforce the basic visual characteristics of the surrounding area. Designs for new buildings can accomplish this by incorporating the fundamental design elements of historic structures with contemporary stylistic trends. New designs should draw upon fundamental building features that define the individual character of the given district. These include how buildings are located on their sites, how buildings in the district relate to the street and basic mass, form, and materials of historic buildings within the district. If new buildings employ these design variables in a manner similar to historic buildings in the district, then the new building will be visually compatible with its surroundings.

If new designs adhere to existing basic design relationships and fundamental similarities within a district, they can be compatible with the historic context of the district while also being distinguishable as of their own time. Modern interpretations of traditional designs are appropriate for new buildings as long as they are stylistically distinguishable from historic buildings. It is common in the City to have isolated commercial buildings within residential neighborhoods. New construction should be in keeping with the size, scale and materials of the historic residential and commercial buildings on the block and contribute to the overall sense of cohesiveness and continuity along the street.

Following are discussions of some of the basic design features that should be considered when designing new buildings for historic districts. For more information on new construction, please refer to *Design Guidelines for Residential Historic Districts in Salt Lake City,* page 121.

13.0 NEW COMMERCIAL CONSTRUCTION

SITE DESIGN

Elements of site design impact the overall appearance and character of a property. When planning new construction, it is important to consider issues such as street patterns, building orientation, street lighting, and parking as part of the overall site plan.

Street Patterns

Street patterns or layouts, including alley development, are important elements that contribute to the overall character of a historic district. Street patterns influence how buildings are sited and lots developed. Street plans can vary for individual districts and even within districts. Traditional street patterns should be preserved when planning new construction.

Building Orientation

Salt Lake City's commercial buildings traditionally have store fronts and primary entrances oriented to the street, sidewalks and landscape features. This pattern encourages pedestrian consumer business and accessibility. Entrances are often evenly spaced along a street as well, which helps create a sense of visual continuity for a neighborhood. When constructing a new building in a historic district, this visual continuity can be maintained by locating entrances of the new building similarly to the traditional manner established along a block.

Street Lighting

New street lights should be designed to be compatible with the surrounding historic commercial area and other elements of the streetscape. In residential areas, lighting should be appropriate to the design and scale of the neighborhood. Street lighting should be subtle and unobtrusive. It should not dominate the visual appearance of the site nor should it detract from the architectural character of surrounding buildings. Street lighting that invokes a false sense of history is not recommended.

13.0 NEW COMMERCIAL CONSTRUCTION

Parking

Large parking areas should be visually unobtrusive and located to the rear of the property. Owners are encouraged to add appropriate planting materials to parking areas as well as screening from view of the street. Parking garages should be sensitive to the surrounding historic neighborhood and streetscape. Mass and scale should be comparable to historic structures, and the building should not compromise the visual continuity of the street. Construction of parking garages should follow the design guidelines for new construction.

BUILDING SCALE

Building Height

Visual continuity is also obtained through similar building heights along a street or within a district. The height of newly constructed buildings should be within the range of heights historically found in the area. Likewise, prominent features such as cornices or parapets should be of similar height as those traditionally found in the neighborhood. In order to maintain the established visual continuity of the streetscape, it is important that new buildings not overwhelm surrounding historic structures in height, but respect the established height pattern of the vicinity.

Building Width

Similarity in building widths along a block or within a district creates a sense of rhythm that contributes to the sense of visual continuity and cohesiveness of the streetscape. When designing new construction, it is important to reflect the established pattern of building width in the area. New buildings may be wider than existing building widths as long as they convey a perception of width similar to historic buildings. This can be achieved by incorporating vertical divisions or subtle setbacks in the building's design which give the appearance of traditional widths.

Mass and Scale

Mass and scale are significant design features that contribute to the visual character and rhythm of historic districts. Commonly, historic commercial buildings along a given street were built with

13.0 NEW COMMERCIAL CONSTRUCTION

similar mass and scale. While the trend has been for commercial buildings to become increasingly larger over time, it is important that newly constructed buildings respect the traditional scale of buildings in the surrounding area. While new buildings may be larger than historic ones, it is important that new construction not be dramatically greater in mass and scale than that which has been established in the neighborhood. A building that is much larger than surrounding historic structures will compromise the visual continuity of the streetscape.

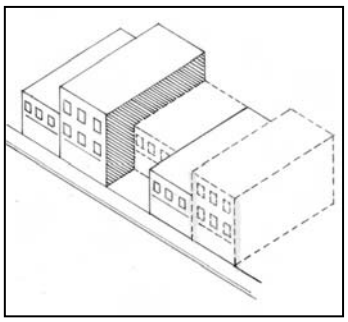

On the top, inappropriate new construction. On the bottom is shown appropriate new construction with uniform setback to create a continuous wall of facades.

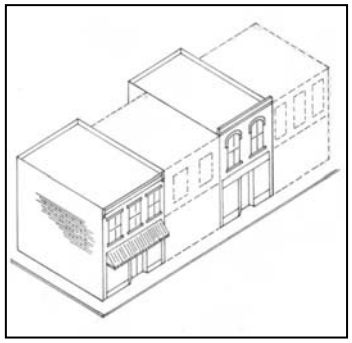

Solid to Void Ratio

Solid to void ratio refers to the relationship between exterior solid wall space and windows and doors. Traditionally, the façades of commercial buildings have had similar amounts of openings or glass (windows and doors), and thus share a relatively uniform solid to void ratio. This includes storefronts and display windows, which commonly occupy the ground level, as well as upper story windows. When planning new construction, the façades of the new building should have a similar amount of wall space in comparison to openings as that of historic buildings in the area.

Lighting

Commercial buildings often have exterior lighting to enhance the visibility of the businesses which they contain. Traditionally, this lighting has been limited and subtle with simple fixtures that highlight features such as entrances and/or signage on the building. If exterior lighting is planned for new buildings, it should be similar to existing lighting on surrounding historic buildings in regard to the position, style, and frequency of lights. Lighting on new buildings should not overwhelm the streetscape and be subtle and simple in design.

Street Patterns

12.1 Respect historic patterns of building development. Situate new buildings on their sites in a similar manner to surrounding historic buildings in the area.

13.0 NEW COMMERCIAL CONSTRUCTION

12.2 Preserve historic street patterns. Most historic areas of Salt Lake City developed in traditional grid patterns. Ensure new construction within historic districts does not interfere with historic street or alley patterns.

Building Orientation

12.3 Orient new construction toward the major street. Traditionally primary entrances are oriented to the street, which encourages pedestrian traffic. Orient new buildings toward the street to be consistent with the character of the streetscape.

12.4 Create a continuous façade wall through setback of new buildings in line with existing buildings. Maintain the traditional lines that have been established along the street to create an even flow of buildings.

Street Lighting

12.5 Keep street lighting simple in design and unobtrusive. Ensure lighting does not visually dominate the site or detract from the architectural character of surrounding buildings

12.6 Keep street light design compatible with the surrounding streetscape. In residential areas, this may mean very subtle or minimal lighting.

12.7 Replicas of historic street lamp designs are not allowed. Avoid replicas, as they invoke a false sense of history. Contemporary designs based on traditional styles may be approved.

Above is an example of an appropriate exterior pole light (1136 E 3rd Avenue).

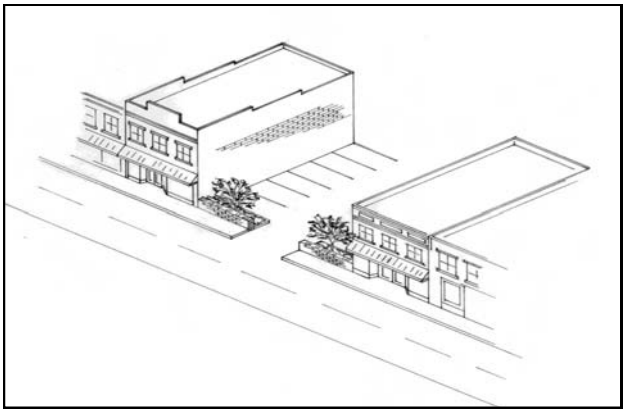

Parking lots should be screened with landscaping aligned with adjacent buildings.

13.0 NEW COMMERCIAL CONSTRUCTION

Surface Parking in Residential Districts

12.9 Protect historic buildings and structures when planning and constructing parking lots.

12.10 Place parking areas where they are least visually obtrusive. The rear of buildings is the best choice for parking areas if feasible.

12.11 Screen new parking areas with landscape materials. Screen new parking areas through the use of landscape materials such as shrubs, walls, or trees. Ensure these landscape materials have the same setback and location as the historic streetscape elements of adjacent buildings. Divide large parking areas with plantings.

Older shade trees should be incorporated in the screening of new parking lots.

Additional landscaping would help to screen this parking lot in the Avenues Historic District.

13.0 NEW COMMERCIAL CONSTRUCTION

Parking Garages in Commercial Districts

12.12 Construct parking garages of design compatible with adjacent historic buildings. Design new parking garages to be compatible with adjacent historic buildings in materials, fenestration, massing, scale and detailing.

12.13 Maintain the pedestrian streetscape at parking garages. Where parking structures abut streets, retail or other uses along the ground level are strongly encouraged to maintain pedestrian interest and activity.

12.14 Screen parking decks. Ensure building materials and design effectively and attractively obscure the view to the interior of all parking decks. Design garages so that the sloping circulation bays are internal to the building and not expressed in the exterior treatment of the building.

Site multi-story parking lots in the downtown area at interior areas of the block; design them to screen vehicles as much as possible, such as this garage in the 100 block of State Street.

When built directly on the street, design new parking garages to complement adjacent historic buildings in materials, fenestration and overall design.

13.0 NEW COMMERCIAL CONSTRUCTION

BUILDING SCALE GUIDELINES

Mass and Scale

12.15 Construct new buildings to be compatible with adjacent buildings in terms of scale and proportion. Replicating the existing pattern established along the block will provide visual continuity and uniform scale.

12.16 Construct new buildings so they are not dramatically larger than historic buildings, as to not overwhelm the streetscape. While new buildings may be larger than historic ones, ensure they do not compromise the visual continuity of the street. New buildings of a larger mass may be subdivided into smaller visual modules that are similar in size to historic structures in the area.

Height

12.17 Construct new buildings so their height is compatible with that of adjacent historic buildings. There is a wide diversity of building heights in Salt Lake City. Ensure new construction is compatible in height with the block and general surroundings on which it is sited.

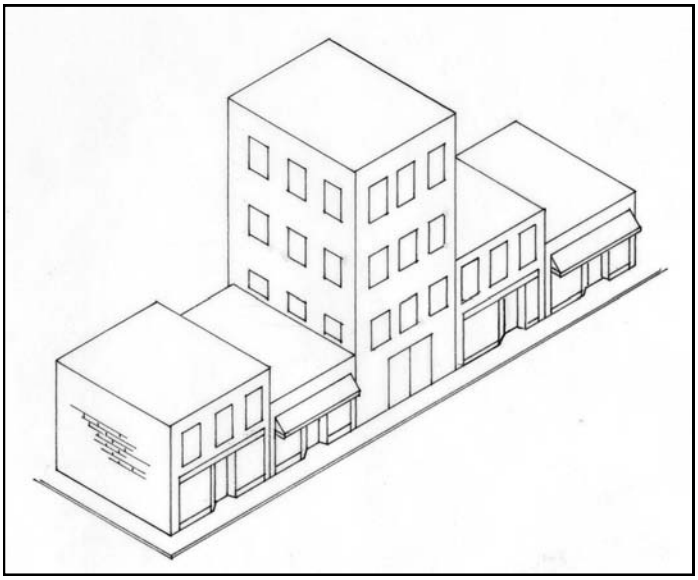

New buildings that are not compatible in height to surrounding historic buildings, such as that shown in the image at left, disrupt the sense of visual continuity along the street, and thus compromise the character of the streetscape.

13.0 NEW COMMERCIAL CONSTRUCTION

Width

12.18 Construct new buildings to appear similar in width to surrounding historic buildings. If new construction is filling a large footprint that is wider than traditional buildings along the block, divide the new construction into visually separate sections that give the appearance of traditional building widths. This can be accomplished with vertical divisions within the building design.

Large new buildings should employ vertical divisions to be consistent with traditional historic building widths.

Solid to Void Ratio

12.19 Ensure that window size and proportion of openings are consistent with adjacent historic buildings. Design new contemporary buildings to have similar amounts of wall space and openings for windows and doors as neighboring historic buildings. Create patterns in rhythm, size, and spacing of window and door openings similar to surrounding historic buildings.

13.0 NEW COMMERCIAL CONSTRUCTION

BUILDING FORM

12.20 Construct new contemporary buildings of forms that are similar to those of existing historic buildings along the blocks on which they are sited. Typically, commercial buildings in Salt Lake City have been constructed in simple rectangular forms of varying heights.

12.21 Ensure the roof form of new commercial buildings match those of adjacent historic buildings. Flat roofs are most common for commercial buildings in Salt Lake City, but design new construction with roof forms consistent with surrounding buildings on the block.

12.22 Maintain the traditional separation between storefronts and upper facades. Typically, ground floor storefronts are visually separated from upper floors through design patterns and window placement. Replicate this separation in new construction, and maintain the alignment with adjacent buildings.

Solid to void ratio: The top sketch at left illustrates new construction that maintains traditional solid to void ratio through appropriate number and size of windows. The bottom sketch illustrates inappropriate window size and placement.

13.0 NEW COMMERCIAL CONSTRUCTION

Rhythm and Spacing

12.23 Ensure proportions of window and door openings are similar to those of surrounding historic buildings. Similarity in rhythm and spacing of window and door openings strongly contributes to the visual appearance and character of a district. This includes the pattern of display windows along storefronts as well as upper level windows. It is important that new contemporary construction maintain a pattern that is compatible with that already established in the district.

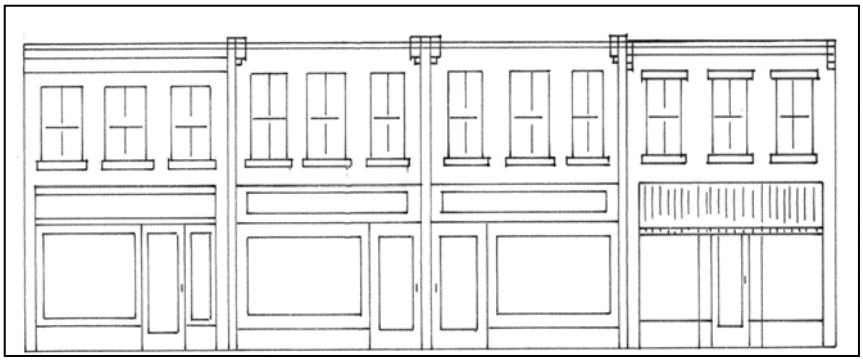

Historic New *Historic*

New construction should be consistent with storefront and window size and spacing.

BUILDING DETAILS

Materials

12.24 Use of traditional building materials that are compatible with adjacent buildings is preferred. Common building materials such as wood, brick, and metal help to provide a sense of visual continuity and flow to the street. Alternative materials or combinations of materials for contemporary buildings will be considered on a case by case basis.

12.25 New materials that are similar in character to traditional materials may be acceptable with appropriate detailing. Alternative materials for contemporary buildings may be approved if they appear similar in scale, proportion, texture and finish to materials used historically. Also, alternative materials must have a proven durability in Salt Lake City's climate. Different materials may be appropriate for commercial areas with historic architecture from the recent past.

13.0 NEW COMMERCIAL CONSTRUCTION

Architectural Character

12.26 Building components of new construction that are similar in size and shape to those found historically along the street are preferred. Components such as windows, doors, bulkheads, and display windows of newly constructed commercial buildings that are comparable in size and shape to those of historic buildings in the area help to maintain visual continuity in the district.

12.27 The scale of decorative elements similar to that of surrounding historic examples is preferred. These include ornamental elements such as cornices, moldings, or other decorative elements.

12.28 Construct new buildings to appear contemporary but compatible in design to historic buildings. It is important to be able to distinguish new buildings from historic ones. Do not seek to replicate historic styles in new construction design, nor contrast dramatically with the existing historic architectural context. New buildings need to be visually compatible with neighboring historic buildings, yet be representative of their own time. Visual compatibility is achieved through similarities in mass, scale, and established patterns of features such as windows, doors, and storefronts.

12.29 Contemporary interpretations of traditional details are encouraged. For example, contemporary designs for window moldings and door surrounds can provide visual interest and convey that the construction is new.

12.30 The imitation of historic styles is discouraged. Replication of historic styles makes it difficult to distinguish old and new buildings, and thus interpret the evolution of architecture within the district. Contemporary interpretations of historic styles may be considered if they are subtly distinguishable as new.

New contemporary construction such as illustrated above should have windows and storefronts in keeping with traditional designs and detailing.

13.0 NEW COMMERCIAL CONSTRUCTION

Windows

12.31 Windows similar in size and orientation with those in adjacent historic architecture are encouraged. Traditionally upper story windows in Salt Lake City's historic commercial buildings are rectangular in form with a vertical emphasis. Transoms, both rectangular and arched forms, are also common. In historic commercial buildings of the more recent past, a more horizontal emphasis or non-traditional window size and orientation may be present.

12.32 Use historic examples to design storefront display windows to reflect appropriate size, scale, and proportion. Display windows are important character-defining features of commercial buildings, and similarity in scale will promote visual continuity of the streetscape.

12.33 Maintain traditional window shape. Odd window shapes such as octagons, circles, diamonds, etc. are discouraged unless they are present in neighboring historic commercial buildings of the recent past.

New construction should be designed with appropriate storefronts and awnings as at (242 S 700 East).

13.0 NEW COMMERCIAL CONSTRUCTION

Entries

12.34 Use historic examples to design appropriate entries in size, shape, and placement. Salt Lake City's historic commercial buildings have a wide variety of entrances, including recessed entries, central and corner entries, and both single and paired (double) doors. Similarity in entrances of new designs will promote a unified sense of scale and rhythm along the street.

Simple shed roof canvas awnings are also appropriate for entrances such as at 442 N 300 West.

Awnings and Canopies

12.35 Use traditional materials in awnings and canopies. Cloth, canvas, or metal awnings or canopies are best for Salt Lake City's commercial buildings. Vinyl or other synthetic materials are not appropriate.

12.36 Install awnings that fit the opening(s) to which they are attached. Use rectangular awnings for rectangular openings, and curved awnings for arched openings.

Use traditional awning locations, materials, and designs on new construction as used on historic buildings. Shed canvas awnings that fit storefront openings are recommended (136 S Main Street).

13.0 NEW COMMERCIAL CONSTRUCTION

Lighting

12.37 Install subtle and unobtrusive exterior lighting. Install light fixtures that coordinate in design, materials, and placement with the overall façade composition and streetscape.

12.38 Install fixtures that complement the building design and are visually subordinate. Ensure light design complements the new building's style and does not detract from the surrounding historic setting. Install lighting as a subtle addition to the property that does not dominate the overall site or intrude on adjacent properties.

12.39 Do not install light fixtures that suggest a false sense of history. Contemporary interpretations of historic light fixture designs are appropriate; do not attempt to replicate fixtures of earlier architectural periods.

12.40 Sight lighting should be congruent and appropriate for the surrounding area. Install light design that complements the building design while not detracting from the historic setting. For commercial buildings in residential neighborhoods, lighting must have a minimal impact on surrounding residences.

Datestones/Cornerstones

12.41 Install datestones or cornerstones to identify new construction. In order to help distinguish new construction from adjacent historic buildings, the addition of datestones or cornerstones displaying the building's date of construction is encouraged .

Local Historic Districts

The Avenues Historic District

The Avenues is Salt Lake City's largest locally-designated historic district and the one best-known for the preservation efforts of its property owners. Fine views of the valley, proximity to downtown and long-standing diversity of both architecture and population make the Avenues a desirable place to live.

The Avenues was platted in the 1850s, but did not really begin to grow until 1880 when the creek was diverted bringing water to the higher elevation of the benches. During the 1880s, Salt Lake City emerged as a regional center, and the Avenues reflected that growing prosperity in new homes built in all the architectural styles popular across the country. Most of the neighborhood residents were middle- or upper-middle class professionals and tradespeople. Some families hired architects to design their homes, but most residents relied on plans and ideas from popular architectural pattern books. Between 1880 and 1930, the streets of the Avenues filled with homes—from Victorian houses with ornate gingerbread detail to bungalows with clean, horizontal lines and broad, inviting porches.

Water was not the only factor that spurred growth in the Avenues. Rail transport also made the area a more viable neighborhood. During the late 1870s, mules pulled streetcars through the district. By the early 1890s residents rode electric cars along Third, Sixth and Ninth Avenues, which is why these streets are wider and flatter than others in the neighborhood.

A Distinctive Urban Neighborhood

From its inception, the Avenues differed from the rest of the City in that it was laid out in smaller blocks with smaller building lots. Smaller lot size and narrower streets and sidewalks, coupled with large scale houses, made the Avenues denser than other 19th century Salt Lake City neighborhoods. The result is a particularly rich collection of era-specific urban architecture.

Many of the early houses in the Avenues are best described as Victorian Eclectic, indicating a flexible approach to Victorian design. On the other hand, a few Avenues residents adopted high-style architecture such as Queen Anne, Shingle, Colonial, Classical Revival and Italianate styles. Soon after 1910, bungalows came into vogue, and the streets of the Avenues reflected the popularity of these livable, low-profile homes. Churches and schools were also located in the Avenues.

This residence at 740 E 2nd Avenue retains much of its original storefront and arched upper floor windows.

To serve the Avenues residents, stores were built throughout the neighborhood from approximately 1910 to 1950. These buildings housed neighborhood services such as grocery stores, hardware stores, barbershops and restaurants. While some were constructed in the middle of blocks, others were built at prominent corner locations. Typically these commercial buildings were two-stories in height with large storefronts and businesses on the first floor and living quarters for the proprietors on the second story. Known as Two-Part commercial blocks, these buildings were designed with detailing of the period such as Romanesque, Colonial Revival, and Craftsman. An excellent example of this building form is the corner commercial building at 740 E 2nd Avenue. Built ca. 1910, this building retains its original recessed storefront and has arched windows on the second story. A later example is the corner commercial building at 702 E 3rd Avenue which was built ca. 1930 with steel windows on the second floor and decorative brickwork on the first floor. These and other commercial buildings in the neighborhood continue to provide important business locations while others have been converted into residences.

Rent and Reclamation

Toward the end of the 19th century, the numbers of renters in the Avenues increased. Widows who needed income after their husbands died managed many rentals. Others were built by development companies. Small scale rental properties were constructed throughout the district, and large apartment complexes were built in the southwest quadrant closest to Temple Square. Like single-family homes built in the Avenues during this period, these apartment complexes incorporate many styles, including Classical Revival, Prairie, Tudor Revival and, during the 1930s, Art Moderne.

This building was designed with simple detailing ca. 1930 and has rectangular steel casement windows and original display windows (702 E 3rd Avenue).

By mid-20th century, the popularity of the Avenues declined. Newer subdivisions were developed throughout the City as mass transit and the automobile made living close to the workplace less essential. By the 1960s absentee landowners owned much of the property in the Avenues, and deterioration was the result. At the same time, high-density residential zoning resulted in the demolition of many historic properties. Newly constructed apartment buildings were inconsistent with the architectural character of the area.

Fortunately, the Avenues was rediscovered during the 1970s. Low-interest loans provided by the City assisted renovation activity, and the neighborhood was designated a local historic district in 1978. The following year residents successfully petitioned the City to downzone most of the Avenues to a land use designation more compatible with its historic character. With those changes, residents of the Avenues began renovating their historic properties with confidence and the value and livability of their neighborhood were assured.

Capitol Hill Historic District

The Capitol Hill Historic District lays claim to being the City's most distinctive neighborhood. Its steep and varying topography demands construction features such as high foundations and retaining walls. Blocks are oddly shaped, street patterns are unpredictable and dwellings are haphazardly oriented to the street. In both layout and architecture Capitol Hill is highly eclectic, with a continuum of building styles and types that span early settlement to the present.

Mormon Beginnings

Close to Main Street businesses and manufacturing establishments, yet removed from the noise and commotion of downtown, Capitol Hill has been a popular place to live since Salt Lake's earliest days. The district's first residents were Mormon immigrants of limited means from Great Britain and Scandinavia. Even after 1900, the neighborhood continued to attract recent arrivals in similar social and economic circumstances. These early Capitol Hill residents were primarily craftsmen such as carpenters or stonemasons who often built homes that were high-quality reflections of their trade.

During the 1880s when water became more widely available in the Capitol Hill area, development intensified and, for the first time, was carried out in an orderly manner. The earliest lots had been arranged haphazardly along the hills. During the rapid growth of the 1880s, standard rectangles were laid out. As a result, the orientation of houses changed from facing the hillside, regardless of relationship to the street, to being parallel to the street. This is one source of today's interesting Capitol Hill streetscapes.

In addition to the various residential buildings, a number of brick and frame commercial buildings were also constructed in the neighborhood. Most of these were One-Part commercial blocks with large storefronts and detailing on the upper façade such as corbelled brick cornices. Businesses in these buildings provided groceries, restaurants, and other services for the neighborhood. These types of commercial buildings are scattered throughout the Capitol Hill Historic District and continue to be used for restaurants and other businesses. A fine example is the building at 271 N Center Street.

The building at 271 N Center Street has been preserved and rehabilitated as a restaurant.

The Capitol Hill neighborhood was also served by a neighborhood shopping area along 300 West. A series of one-story brick commercial buildings were built along this busy street in the early 20th century and provided a cluster of businesses to serve the neighborhood. In addition to stores such as groceries and hardware stores, clothing stores and other retail specialty shops were located along several blocks of this street on the western edge of the district. The building at 422-426 N 300 West is a good example of the type of commercial buildings built as part of this shopping district.

The O.P. Skaggs building at 422-426 N 300 West has been well preserved and retains much of its original storefront.

20th Century Popularity

Between 1880 and 1900, Capitol Hill became an increasingly fashionable place to live. Although it remained a predominantly Mormon enclave longer than other Salt Lake neighborhoods, it began to change as the City's population accommodated the influx of non-Mormons. The families of men in mining, Denver and Rio Grande Western Railroad workers, and the trades associated with the telegraph and the telephone industries found Capitol Hill appealing. In an effort to create a stylish image, street names on the west slope were changed from Bird, Cross, and Locust to the names of fruits. This sub-neighborhood became known as the Marmalade District.

The upper portion of the south slope, known as Arsenal Hill, developed later than the Marmalade District, taking its name from the City arsenal located there until 1876, when 40 tons of blasting powder accidentally exploded, ceasing operation at the facility. During the 1890s, the land used for the arsenal became available for building. Arsenal Hill's fine views and close location to downtown made the slope appealing to residents who could afford high style, architect-designed houses. The completion of the State Capitol building, with its extensive grounds, enhanced the neighborhood's desirability.

Decline and Revival

After World War II and the ensuing exodus to the suburbs, the housing stock and overall atmosphere of Capitol Hill began to decline. The neighborhood was too eclectic and too old to compete in a postwar era that valued new goods and conformity. By the 1960s, the area was reputed as unstable and unsafe. Architecturally, Capitol Hill fell to its nadir with the construction of Zion's Summit during the early 1970s. These high-rise condominiums dwarfed the surrounding structures and marred the historic ambiance of the Marmalade District.

Happily, by the 1970s preservationists and urban pioneers began to invest in Capitol Hill by renovating historic homes. The scale of the neighborhood, its location near downtown, and its unique architectural resources — the very qualities that drove residents away two decades earlier — now proved its biggest appeal. Today Capitol Hill is a vibrant neighborhood of interesting streets and

Central City Historic District

One of Salt Lake City's oldest neighborhoods, the Central City Historic District is associated with Joseph Smith's original City plan. His "Plat for the City of Zion" designated ten-acre blocks which remain intact in Central City. That said, the district contains the most varied and complex land-use patterns in Salt Lake City. Central City's eclectic mix of historic architecture includes unique examples of building styles from many periods. Some of the City's original adobe vernacular homes survive here. Yet Central City streets also contain fast-food restaurants, office buildings and retail centers.

Vibrant Working-Class Enclave

During the late 19th century, the railroad opened Salt Lake City to markets across the country, and mining became the state's dominant industry. This created a demand for unskilled workers, and those workers needed affordable places to live. In addition, Central City's proximity to the expanding downtown business district and nearby manufacturing and processing plants attracted clerks, laborers, and craftspeople. The district became known as a neighborhood for the working and middle class.

With the exception of imposing residences at the north end of the district, Central City never became a fashionable neighborhood, and the population was often transient. Workers often moved on to other jobs and to other towns and Salt Lake's more prosperous families were generally attracted to the benches where the air was cleaner.

Given these demographics, rental housing has proliferated in Central City, and much of the housing stock has always been modest. Today, working- and middle-class examples of Victorian homes, Queen Anne houses and bungalows can be found throughout the area. Rental units are numerous, including examples from every period of Salt Lake City history. In fact, the district's one-story apartment buildings with courtyards are quite unique, as is the City's only remaining example of Victorian row houses.

Exceptions

Central City was not only home to working-class citizens. Over the decades, a core population of professionals, businessmen and politicians has chosen to live in this inner city neighborhood. During the late 19th and early 20th century, lawyers and executives associated with the mining industry lived in the north end of the district. Similarly, not all of the buildings are modest. Mansions stand along 100 South, and a small influx of affluent families built in Central City around 1900.

Most historic buildings in Central City are residential. Exceptions include the Craftsman-style Swedish Baptist Church built in 1913, and the L.D.S. Twelfth Ward Chapel built in 1939, an unusual example of Art Moderne. One of the most impressive nonresidential structure is Trolley Square. Built in 1908 as trolley barns for the Utah Electric and Railway Corporation, the barns were renovated as a shopping and entertainment complex in the early 1970s.

Within the Central City Neighborhood are a number of commercial buildings. Many of these have been built within the past thirty years, especially those along sections of 400 South. However, there are still a number of corner commercial buildings constructed in the early 20th century. Most of these are modest One-Part commercial blocks with minimal architectural detailing such as the corner commercial building at 802 S 600 East. This

building retains much of its original storefront and a corner brick pier. The upper façade features brick piers and a simple cornice.

Neighborhood Efforts

As a dense inner city neighborhood, Central City has always been beset by land-use conflicts. Its large blocks led to haphazard, incompatible development as early as 1900, and the area has been subject to the problems associated with absentee ownership for decades. In addition, 400 South has developed as a major automobile commercial corridor unfriendly to pedestrians.

Yet over the years, the City and local residents have affected improvements in Central City. One effort still intact are "parkings," grass medians down the center of several streets. These medians were created when electrical poles were removed to accommodate the street car system in the early 20th century. Two decades later during the Great Depression, a neighborhood beautification group organized to buy and maintain foreclosed homes. The group also worked to keep businesses out of the neighborhood's residential areas. Most recently, neighborhood residents have been renovating structures. In 1991, Salt Lake City designated part of Central City as a local historic district.

The commercial building at 802 S 600 East is one of several located at prominent corner locations in the Central City Neighborhood.

Exchange Place Historic District

The distinctive buildings that make up the Exchange Place Historic District appear much as they did when they were built between 1903 and 1917. Their architecture suggests a mini Wall Street for their era, a major financial center for the rapidly developing American West. Developed as a result of Mormon-Gentile commercial rivalry, this narrow street one block long, was Salt Lake City's second major business district.

Commercial Rivalry

Between 1870 and 1900, the business hub of Salt Lake City was Temple Square surrounded by the ZCMI store, the Constitution Building, Desert News building, Hotel Utah, and the LDS Church Office Building. In an effort to establish a non-Mormon counterweight to this dominant financial center, a small group of non-Mormon businessmen set out to move the focus of Salt Lake finance and enterprise to Exchange Place four blocks to the south.

The most important contributor to Exchange Place was Samuel Newhouse. Before he was forty, Newhouse had made several million dollars in western mines. With vast interests in Utah mining fields and with offices in New York, London and Paris, Newhouse attracted large sums of capital to Salt Lake City. It was Newhouse who financed the hallmark buildings of the district—Utah's first skyscrapers, the 12-story Boston and Newhouse, completed in 1910. These twin structures frame the entrance to Exchange Place and even today tower over nearby buildings. With their distinctive New York look, the Boston and the Newhouse buildings reflect Samuel Newhouse's desire to transplant the affluent image of East Coast cities to Utah.

Major Institutions

Newhouse donated Exchange Place land for a new Commercial Club Building. Essentially the Chamber of Commerce of its day, the Commercial Club chose to build a luxurious building designed to look like a smaller version of the New York Athletic Club, complete with a swimming pool, banquet room, private dining rooms, and game rooms. The building was designed with the influences of the Renaissance Revival style in its arched windows and entrance on the first floor and elaborate cornice at the roofline.

Locating the Commercial Club in Exchange Place helped assure the area's success, but even more important was the Salt Lake Stock and Mining Exchange. Organized in 1888, the exchange provided the mechanism for raising capital to develop Utah's lucrative mines. Built in 1908, the building was designed in the Neo -classical style with prominent Ionic columns supporting a dentilled pediment. The engine that drove Salt Lake City growth for decades, the Exchange was especially vibrant during the uranium boom of the 1950s when a mania for buying penny stocks to finance the development of uranium mines swept the country. Because of the speculative nature of the uranium trade, one historian described Salt Lake City in the 1950s as "the gambling capital of the world."

Decades of Success and Recent Sustainability

Prominent Utah businessman Orange J. Salisbury shared Samuel Newhouse's goal of shifting the center of Salt Lake City's business district to the south end of downtown. He financed the Felt Building, an early example of Sullivanesque architecture in Utah. Salisbury also financed the New York Hotel with the latest in luxury—steam heat and electric lights in every room. Other buildings in the district include the New Grand Hotel, also

built with wealth from Utah mines, and the Hotel Plandome, built by non-Mormon businessman Albert Fisher. In addition, the U.S. government built a Classical Revival style Federal Building and Post Office on Main Street where it served as a visual terminus for Exchange Place. The overall effect was powerful.

This early 20th century flurry of building on Exchange Place was dramatic. Not only did the buildings rise high, opulently and quickly, they did indeed draw focus from Temple Square. However, by 1915 Samuel Newhouse was bankrupt. The Newhouse Hotel, originally planned as one of the premier hotels in the West, was quite austere in the end.

Exchange Place was a busy business center for decades, but during the 1960s and 1970s, the area experienced neglect. By the late 1970s, the State and the City were encouraging the restoration and preservation of Exchange Place's unique buildings and streetscape. The New York Hotel was renovated to house a restaurant and offices, one of the first projects in Salt Lake City to adapt a historic commercial building for a new use. Its success brought new life to the building and new interest to Exchange Place itself. Preservation is ongoing. At present the Boston Building is undergoing renovation.

Fortunately, the district's original feel remains intact and, with the recent addition of adequate parking, attractive to business. With its narrow streets and sense of enclosure, Exchange Place is more protected and intimate than many parts of the City. There is even a milder microclimate at the street level where pedestrians are shielded from the weather. What Newhouse intended in 1900, a New York-like streetscape housing a financial center, remains intact today.

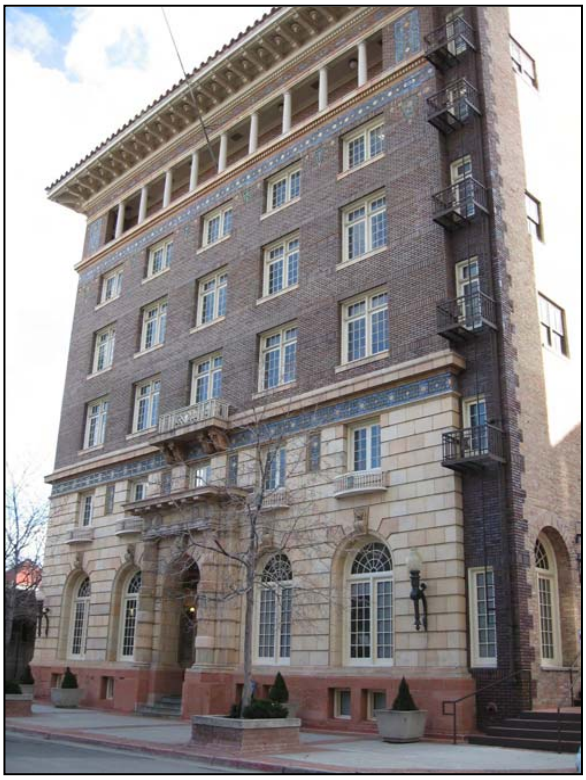

The Commercial Club at 32 Exchange Place is noted for its elaborate façade of brick and terra cotta.

The Newhouse Building at 10 Exchange Place was one of the City's first skyscrapers.

South Temple Historic District

South Temple, formally known as Brigham Street, is frequently referred to as Utah's premier residential boulevard, a testament to the transformation of Salt Lake City from an agricultural village to an urban center that could support the elegant architecture along this street.

Major Axis and Prestigious Address

The street has played an essential role in the development of Salt Lake since the City was founded. According to Joseph Smith's plan for the City of Zion, South Temple was platted as the City's major east-west axis. Brigham Young and other church leaders decided to build homes on South Temple, setting an early precedent for the street's residential prominence. Although early Mormon leaders did not anticipate South Temple's eventual role as the home of wealthy miners and the most urbane street in the state, there is no doubt that they intended South Temple to be an important thoroughfare for the religious kingdom of Zion.

During the 1850s and 1860s, South Temple was rural, lined with adobe homes, orchards and barns. Then the railroad arrived, and fortunes were made. By 1880 frame and brick had replaced adobe. Orchards and barns were replaced with two-story shops and homes. By the 1890s South Temple was fulfilling Brigham Young's prediction that it would become the finest street in Zion. As the 20th century began, South Temple took on the elegant appearance we associate with it today. The most imposing mansions belonged to an influential group of men who had earned great wealth through mining and who had no cultural or religious association with the L.D.S. Church. Their desire to separate themselves socially led to the establishment of the Alta and the University clubs while the construction of the Cathedral of the Madeleine and the First Presbyterian Church announced that non-Mormons had a permanent stake in this prestigious area of the City.

Professional people who were not as wealthy but prominent nonetheless were also building in the South Temple area. They built four-square boxes, Shingle style houses and Arts and Crafts bungalows. These styles were popular throughout the City, but South Temple residents built more elaborate versions representing some of the finest work of the State's best-known architects.

Few historic commercial buildings are located along South Temple but at 432-434 E South Temple Street is a building with an intact ca. 1930s Carrara glass storefront.

Density and Decline

South Temple's grandeur began to wane during the 1920s and 1930s. Wealthy families aged and dispersed. Buildings along South Temple during this period consisted primarily of apartment buildings and clubhouses for fraternal and women's organizations. While these buildings were among the most elegant clubs and multifamily structures in the City, they still represented change for South Temple. Zoning changes allowed commercial encroachment and higher residential densities. As land value increased, many architecturally significant buildings were lost.

As residences were demolished they were replaced in the 1950s and 1960s with modern commercial and office buildings. These buildings brought a different character to the street and represent a wave of construction that is now appreciated for its mid-20th century modern designs. The City designated South Temple as an historic district in 1976, providing for the preservation of the unique buildings and street features that once made South Temple the City's premier address.

University Historic District

Between 1900 and 1920, Salt Lake City experienced prosperity and growth, and the University Historic District is lasting evidence of that expansion. The success of this East Bench community was assured when the University of Utah was established there in 1901. Soon after, the City installed utilities and extended electric streetcar lines to the University area. Stimulated by the presence of the University, the district filled with homes and businesses relatively quickly, making for a homogenous blend of architecture and consistent streetscapes. More than any other Salt Lake City historic district, the University Historic District has a uniform character and identity.

Uniformity and Character

There were a few residents in the University area before 1900, mostly along the western and northern boundaries of the neighborhood. Yet the area did not really take shape until University faculty and staff began building and buying there during the early 20th century. Many professional people not affiliated with the University also resided in the neighborhood. The area was not popular for student residency until after World War II.

The affluence of its residents, its rapid, orderly development and the influence of the Progressive era are all reflected in the district's streetscapes. Four-square architecture, also known as the "box," was a popular choice among University District residents during this time, and these houses are numerous in the area. These large, two-story houses do not tend to be ornate. Rather they have the simple, beautifully fitted details associated with Colonial Revival and Prairie School architecture—giving the homes and streets of the University District a comfortable and substantial feel.

Exceptions to the Rule

The majority of the existing construction occurred after 1900, but this district does contain some Victorian and Shingle style homes. Furthermore, not everyone who lived in the neighborhood was affluent, professional or associated with the University of Utah. City directories from the early 20th century indicate that government clerks, railroad workers, and tradesmen lived on Bueno Avenue in a row of frame and brick cottages constructed in 1905.

The University district has a small but lively neighborhood shopping area on the blocks between 200 and 300 South and 1300 East and University Street. Some of the businesses are located within former homes including several four-square residences. Built in 1930, Fire Station Number Eight at 260 S 1300 East has been converted into a restaurant but maintains much of its original character. This district lacks the types of historic corner commercial buildings found in areas such as Capitol Hill and the

The building at 201 S 1300 East was designed with commercial use on the first floor with residential use above.

As in all of the City's historic districts, more recent, incompatible architecture detracts from the visual unity of the streetscape. Multi-family structures are the most disruptive intrusions. Apartments built during the 1960s with their long narrow shape and orientation away from the street (hence called "boxcars") are scattered throughout the neighborhood. The University Gardens condominiums tower over surrounding buildings on 1300 East. Fortunately, these are exceptions, and not the rule, in the University District.

Maintaining Historic Integrity

Within the last decade, the neighborhood has worked to maintain its historic character and integrity. Today zoning ordinances limit neighborhood density, and the University Historic District is a locally designated district with a design review process in place. Like the district's early 20th century founders, today's 21th century professionals and families find the University Historic District a pleasing place to call home.